LG6250E HYDRAULIC EXCAVATOR PARTS CATALOG

SDLG

SHANDONG LINGONG CONSTRUCTION MACHINERY CO.,LTD.

Spare parts and services

For the owner of the machines of SDLG,only the spare parts and services of SDLG can make your machine to better maintain the original features.

Only SDLG is able to provide you with the perfect match of pure quality spare parts for your machine and knowledge of professional maintenance staff.Only in this way it can ensure sustainable high productivity and longer service life.

LG6250E HYDRAULIC EXCAVATOR PARTS CATALOG

BOM RELEASE DATE:2015-07-16 12:01:18 FILE CREATION DATE:2022-08-01 15:47:53

SHANDONG LINGONG CONSTRUCTION MACHINERY CO.,LTD.

Add：Lingong Industry Park,Economic &Technological Development Area,Linyi,Shandong 276023,P.R.China

Tel：86-0539-8785624/86-0531-66590955

Fax：86-0539-8785618/86-0531-66590959

Web：www.sdlg.cn www.lcm.cn

FOREWORD

This parts catalog of LG6250E hydraulic excavator is made for the convenience of users to use, repair and maintain the machine, which can be refered in the process of using. It can also help the users to be familiar with the structure and assembly relation of the machine. Parts of the engine are showed in details in its structure handbook, which are no longer contained in the catalog.

The catalog identifies drawings and assembly relations of different parts according to the system.Components which can not be taken apart, such as welding parts or riveted assemblies,are marked only by their code without the list of their consisting parts .The list in the catalog is arranged in Chinese and English.

This catalog is based on the LG6250E standard product, which can be a reference for the other nonstandard products, for more information, please consult SDLG, the local dealer or LinGong website. With the advancement of technology, we will keep on improving the product, so some content in the catalog may be inconsistent with the future products, which will not notice the users. When ordering the spare parts, please refer to the electronic system of parts catalog and be kindly inform us the manufacturing date and serial number of the machine.

THE COMPILER
2022.8

SDLG

CONTENTS

A. Diesel engine system

Engine

A1-6250 22

Engine bracket

A2-6250 24

Fuel tank system

A3-6250 26

Fuel filling pump

A4-6250 28

Fuel pipe assembly

A5-6250 28

Water separator

A6-6250 30

Exhaust system

A7-6250 32

Air inlet system

A8-6250 34

Air inlet system

A9-6250 36

Charge air cooler

A10-6250 38

Cooling system

A11-6250 40

Cooling system

A12-6250 44

Radiator fan

A13-6250 46

Piston cooling jet

SDLG

A14-6250 48
Crankshaft
A15-6250 50
Connecting rod kit
A16-6250 52
Cylinder piston
A17-6250 54
Valve drive device
A18-6250 56
Installation kit
A19-6250 58
Actuator
A20-6250 60
Cylinder block assembly
A21-6250 62
Pressure limiting valve
A22-6250 64
Rocker arm kit
A23-6250 66
Rocker arm kit
A24-6250 68
Rocker arm kit
A25-6250 70
Installation kit
A26-6250 72
Cylinder head assembly
A27-6250 74
Plug assembly
A28-6250 76
Tappet

A29-6250 78
Injection pump
A30-6250 80
Installation kit
A31-6250 82
Gear rack
A32-6250 84
Installation kit
A33-6250 86
Cover
A34-6250 88
Camshaft
A35-6250 90
Fuel pipe assembly
A36-6250 92
Fuel injection nozzle
A37-6250 94
Fuel injection nozzle
A38-6250 96
Installation kit
A39-6250 98
Oil cooler assembly
A40-6250 100
Oil pressure sensor
A41-6250 102
Plug assembly
A42-6250 104
Plug assembly
A43-6250 106
Temperature sensor

A44-6250 108
Oil return pipe
A45-6250 110
Protecting plate
A46-6250 112
Turbocharger
A47-6250 114
Plug assembly
A48-6250 116
Plug assembly
A49-6250 118
Turbocharger lubricating pipe
A50-6250 120
Turbocharger lubricating pipe
A51-6250 122
Installation kit
A52-6250 124
Exhaust manifold
A53-6250 126
Cover plate
A54-6250 128
Inlet manifold
A55-6250 130
Pre-heater
A56-6250 132
Plug assembly
A57-6250 134
Installation kit
A58-6250 136
Flywheel housing assembly

A59-6250 138
Installation kit
A60-6250 140
Alternator
A61-6250 142
Pulley assembly
A62-6250 144
V-belt
A63-6250 146
Fan housing
A64-6250 148
Installation kit
A65-6250 150
Water pump assembly
A66-6250 152
Joint
A67-6250 154
Installation kit
A68-6250 156
Fuel pump assembly
A69-6250 158
Plug assembly
A70-6250 160
Drive unit
A71-6250 162
Installation kit
A72-6250 164
Fuel filter
A73-6250 166
Fuel pipe assembly

A74-6250 168
Installation kit
A75-6250 170
Belt tensioner
A76-6250 172
Installation kit
A77-6250 174
Absorber
A78-6250 176
Pulley assembly
A79-6250 178
V-belt
A80-6250 180
V-belt
A81-6250 182
Plug assembly
A82-6250 184
Plug assembly
A83-6250 186
Plug assembly
A84-6250 188
Timing gear cover
A85-6250 190
Plug assembly
A86-6250 192
Valve cover
A87-6250 194
Oil filter kit
A88-6250 196
Air vent pipe

A89-6250 198
Installation kit
A90-6250 200
Thermostat kit
A91-6250 202
Pipe
A92-6250 204
Oil dipstick
A93-6250 206
Oil dipstick
A94-6250 208
Oil pan
A95-6250 210
Oil strainer assembly
A96-6250 212
Flywheel assembly
A97-6250 214
Crankcase ventilation kit
A98-6250 216
Breather pipe
A99-6250 218
Air hose
A100-6250 220
Transport support
A101-6250 222
Starter motor
A102-6250 224
Installation kit
A103-6250 226
Plug assembly

A104-6250 228
Plug assembly
A105-6250 230
Lifting eye
A106-6250 232
Control unit
A107-6250 234
Sensor kit
A108-6250 236
Cable harness
A109-6250 238
Plug
A111-6250 240
Tachometer sensor
A113-6250 242
Impulse sensor
A114-6250 244
Fuel filling pump
A115-6250 246

B. Control system

Battery
B1-6250 250
Key system
B2-6250 252
Headlamp
B3-6250 254
Work lamp
B4-6250 256
Horn

B5-6250 258
Windscreen washer
B6-6250 260
Switch
B7-6250 262
Switch
B8-6250 264
Electronic unit
B9-6250 268
Battery cable
B10-6250 270
Main cable harness
B11-6250 272
Cable harness
B12-6250 276
Telematics control unit
B19-6250 278
Cable harness
B14-6250 280
Relay
B15-6250 284
Sensor
B16-6250 286
Instruction panel assembly
B17-6250 288
Cassette radio
B18-6250 290
Telematics control unit
B19-6250 292

C. null

Travel gearbox

C1-6250 296

Swing gearbox

C2-6250 300

Pump gearbox

C3-6250 304

Travel motor assembly

C4-6250 306

Travel motor assembly

C5-6250 308

Swing motor

C6-6250 312

Swing motor

C7-6250 314

Turning joint

C8-6250 318

Swing gear system

C9-6250 320

F. Hydraulic system

Protecting plate

F1-6250 324

Protecting plate

F2-6250 326

Counter weight

F3-6250 328

Track chain

F4-6250 330

Undercarriage
F5-6250 332
Undercarriage
F6-6250 334
Idler hub
F7-6250 336
Top roller
F8-6250 338
Bottom roller
F9-6250 340
Sprocket wheel
F10-6250 342
Pedal
F11-6250 344

G. null

Cab equipment
G1-6250 348
Cab assembly
G2-6250 350
Cab assembly
G3-6250 352
Cab assembly
G4-6250 356
Cab assembly
G5-6250 360
Cowl frame
G6-6250 362
Engine hood system
G7-6250 364

Side door	
G8-6250	368
Side door	
G9-6250	370
Cover plate	
G10-6250	372
Cover plate	
G11-6250	374
Hand rail	
G12-6250	376
Tool box	
G13-6250	378
Door	
G14-6250	382
Cab floor	
G15-6250	386
Cover plate	
G16-6250	388
Rear view mirror	
G17-6250	390
Rear view mirror	
G18-6250	392
Cab window	
G19-6250	394
Windshield	
G20-6250	396
Driver seat	
G21-4190003559	400
Sun visor	
G22-6250	402

Sun visor
G23-6250 404
Hose assembly
G24-6250 406
Air duct
G25-6250 410
Air conditioning system
G26-6250 412
Instruction panel assembly
G27-6250 416
Instruction panel assembly
G28-6250 420
Slip protection
G29-6250 422
Tool kit
G30-6250 424
Sign and logo
G32-6250 426

H. Working equipment

Hydraulic fluid tank assembly
H1-6250 430
Swing hydraulic system
H2-6250 434
Travel hydraulic system
H3-6250 436
Control valve hose assembly
H4-6250 438
Hose assembly
H5-6250 440

Hydraulic system
H6-6250 442
Control valve assembly
H7-6250 446
Control valve
H8-6250 448
Control valve
H9-6250 452
Control valve
H10-6250 456
Control valve
H11-6250 460
Control valve
H12-6250 464
Control valve
H13-6250 468
Pump link
H14-6250 474
Hydraulic pump
H15-6250 476
Pressure regulator
H16-6250 480
Hydraulic pump
H17-6250 482
Control valve hose assembly
H18-6250 484
Control valve hose assembly
H19-6250 486
Control valve hose assembly
H20-6250 488

Control valve hose assembly
H21-6250 492
Working hydraulic pump assembly
H22-6250 496
Travel motor control valve pedal
H23-6250 500
Travel motor control valve pedal
H24-6250 502
Servo system
H25-6250 506
Servo system
H26-6250 510
Working hydraulic system
H27-6250 512
Working hydraulic system
H28-6250 516
Working hydraulic system
H29-6250 518
Bucket assembly
H30-6250 520
Bucket link
H31-6250 522
Boom attachment
H32-6250 524
Boom
H33-6250 526
Lifting cylinder assembly
H34-6250 528
Attaching arm
H35-6250 530

Dipper arm	
H36-6250	532
Dipper arm cylinder	
H37-6250	534
Cylinder piston assembly	
H38-6250	538
Bucket cylinder	
H39-6250	540
M. Cover system	
Sign and logo	
M3600-58-8970-589	544

A

DIESEL ENGINE SYSTEM

SHANDONG LINGONG CONSTRUCTION MACHINERY CO.,LTD.

Engine

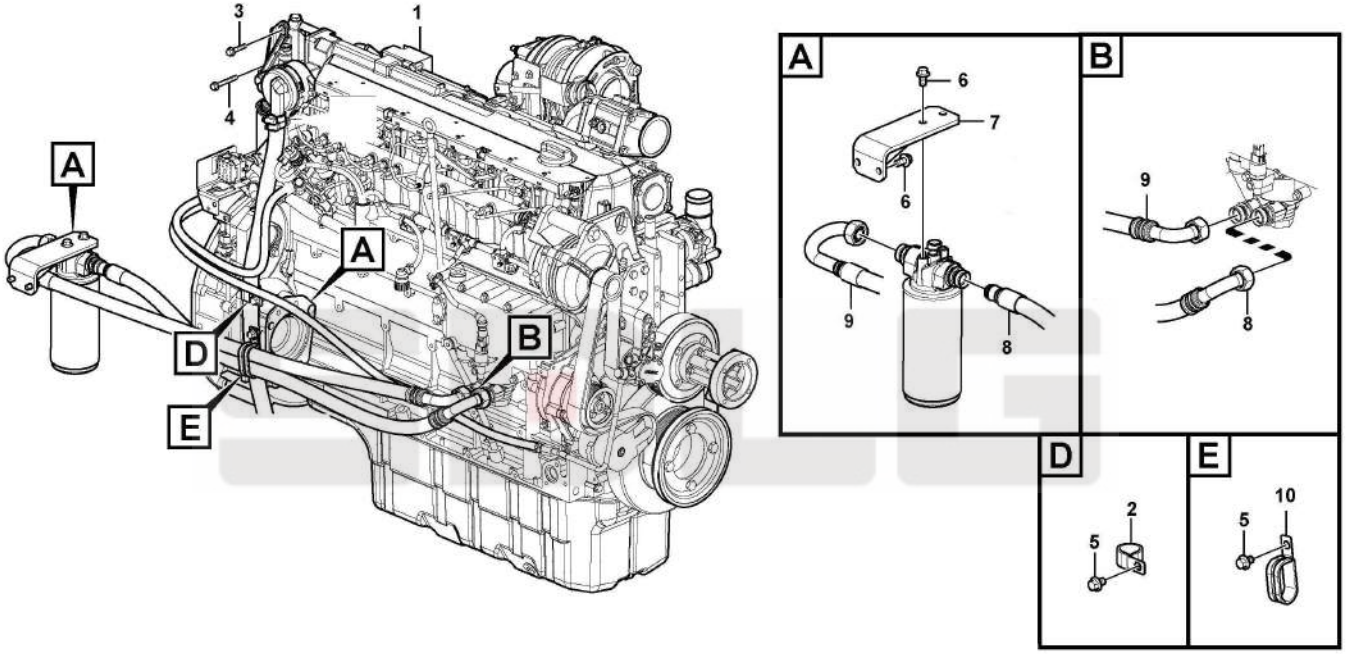

A1-6250

Key	Part No.	Description	Spare parts Y/N	Qty	Remarks
1	11212350	Engine	Y	1	
2	11210259	Clip	Y	1	
3	11210046	Flange screw	Y	2	
4	11210076	Flange screw	Y	1	
5	11210036	Flange screw	Y	2	
6	11210034	Flange screw	Y	4	
7	11220893	Bracket	Y	1	
8	11210985	Hose	Y	1	
9	11210915	Hose	Y	1	
10	11210325	Clip	Y	1	

Engine bracket

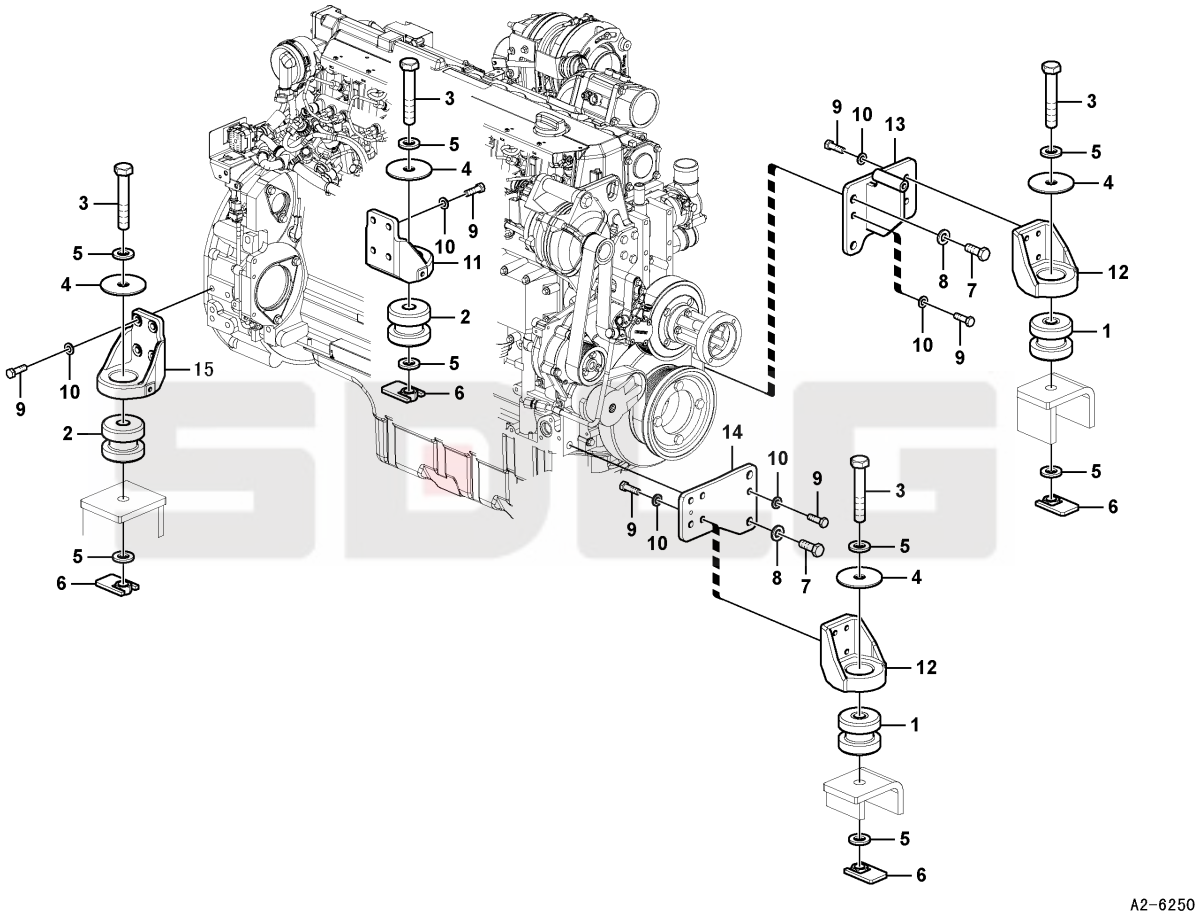

Key	Part No.	Description	Spare parts Y/N	Qty	Remarks
1	11212300	Rubber cushion	Y	2	
2	11212301	Bushing	Y	2	
3	11210211	Screw	Y	4	
4	11210565	Plate	Y	4	
5	11210203	Plain washer	Y	8	
6	11210435	Nut	N	4	
7	11210102	Hexagon screw	Y	4	
8	kongbai	Kongbai	N	4	
9	11210099	Hexagon screw	Y	18	
10	11210198	Plain washer	Y	18	
11	11212327	Bracket	Y	1	
12	11212326	Bracket	Y	2	
13	11212359	Bracket	Y	1	
14	11212328	Plate	Y	1	
15	11212900	Bracket	Y	1	

Fuel tank system

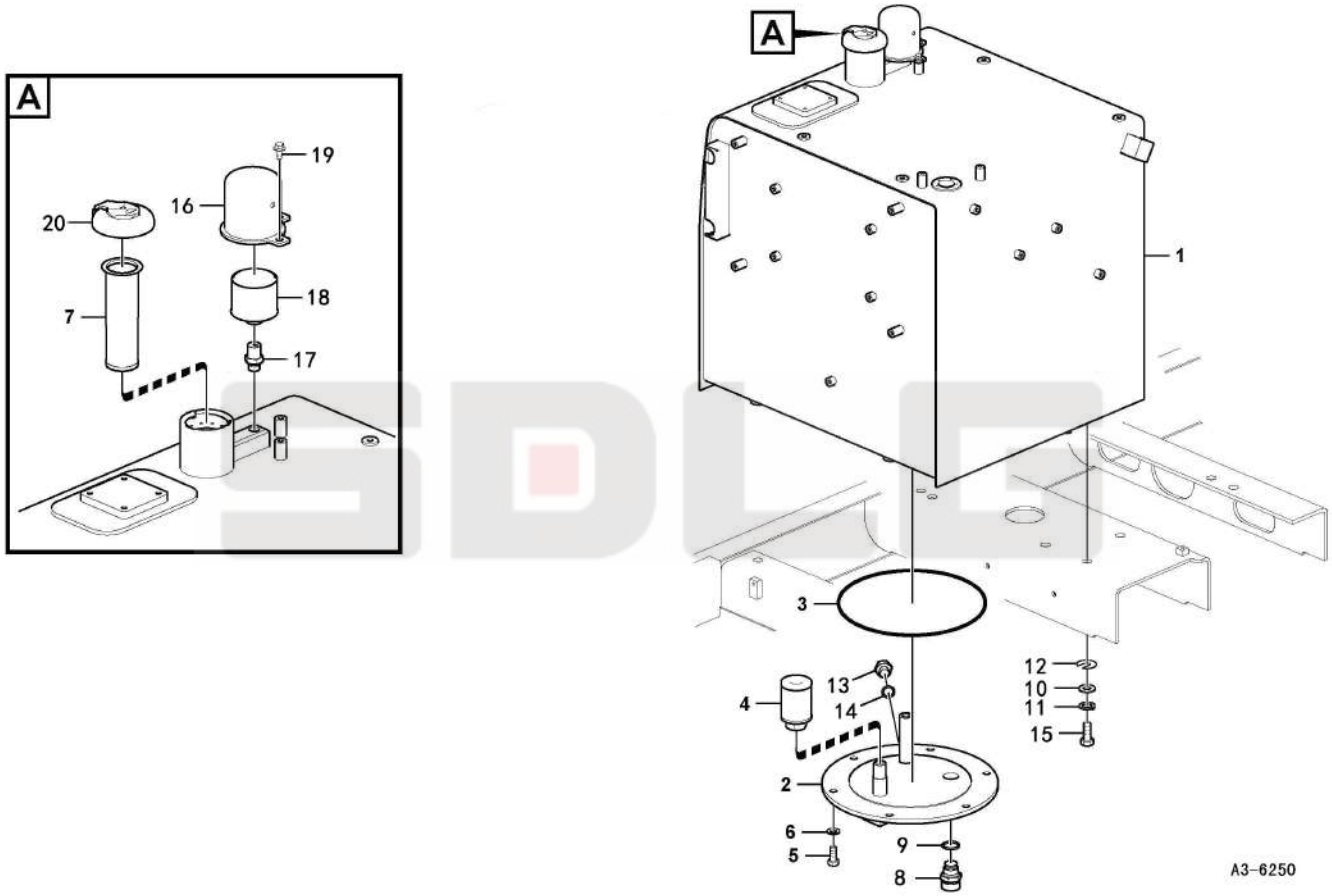

Key	Part No.	Description	Spare parts Y/N	Qty	Remarks
1	14400957	Fuel tank	N	1	
2	14400955	Cover	Y	1	
3	11210070	O-ring	Y	1	
4	11210678	Strainer	Y	1	
5	11210123	Hexagon screw	Y	6	
6	11210197	Plain washer	Y	6	
7	11210752	Oil strainer	Y	1	
8	11210523	Valve	N	1	
9	11210052	Gasket	Y	1	
10	11210200	Plain washer	Y	4	
11	11211638	Spring washer	Y	4	
12	11211124	Shim	Y	5	
13	11210071	Plug	Y	1	
14	11210044	Gasket	Y	1	
15	11210195	Screw	Y	4	
16	14402347	Cover	Y	1	
17	11216592	Connector	Y	1	
18	14401282	Filter	N	1	
19	11210034	Flange screw	Y	2	
20	11216971	Fuel filler cap	N	1	

Fuel pipe assembly

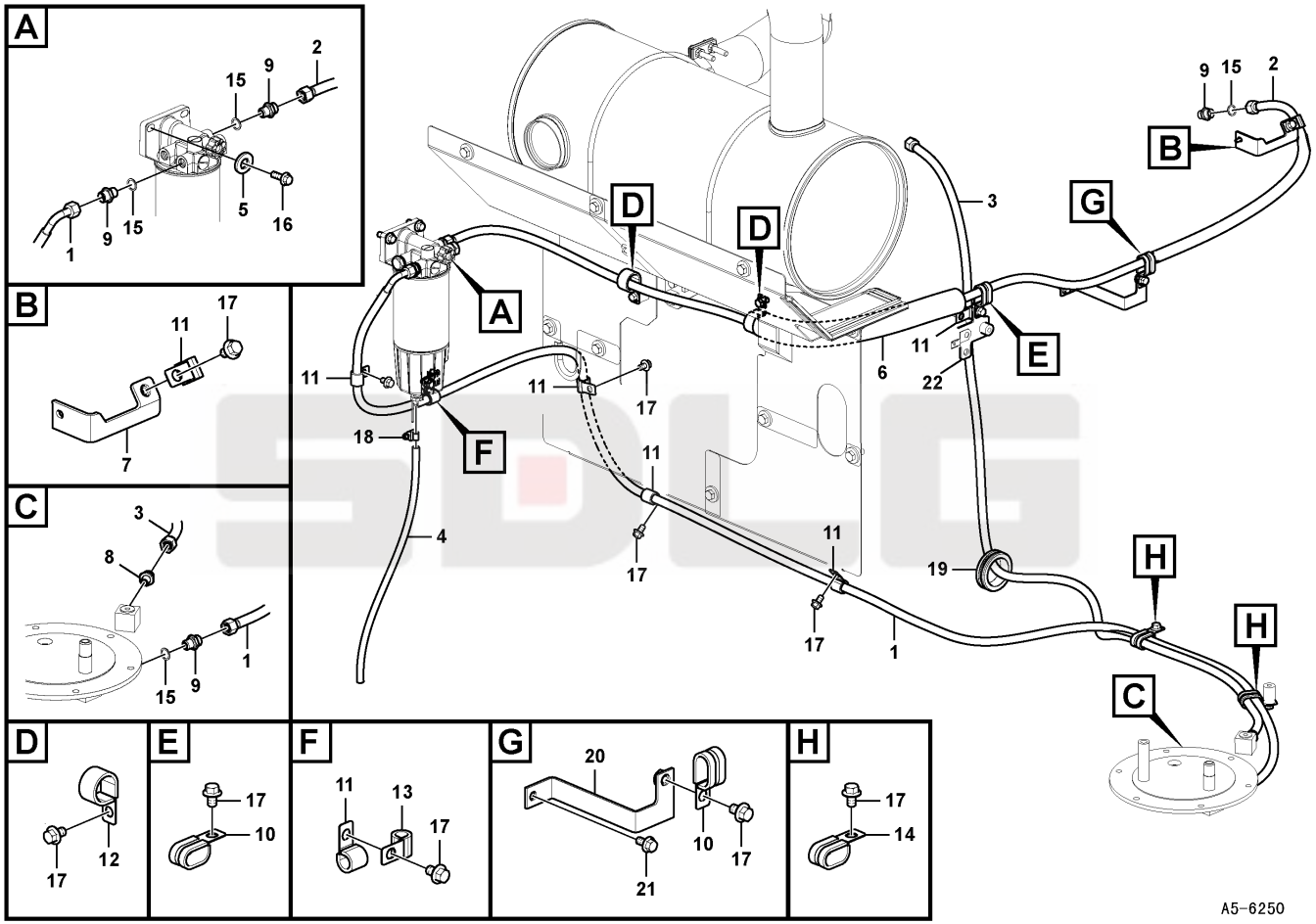

Key	Part No.	Description	Spare parts Y/N	Qty	Remarks
1	11212860	Fuel hose	N	1	
2	11212353	Hose	Y	1	
3	26010005391	Fuel hose	Y	1	
4	11211809	Drain hose	Y	1	
5	11210197	Plain washer	Y	2	
6	11212367	Cover	Y	1	
7	kongbai	Kongbai	N	1	
8	26010005351	Nipple	Y	1	
9	11210073	Nipple	Y	4	
10	11210434	Clip	Y	1	
11	11210810	Clip	Y	5	
12	11210473	Clip	Y	3	
13	11210257	Clip	Y	1	
14	11210696	Clip	Y	2	
15	11211711	Plane gasket	Y	4	
16	11210124	Hexagon screw	Y	2	
17	11210036	Flange screw	Y	12	
18	11214818	Clamp	Y	1	
19	kongbai	Kongbai	N	1	
20	kongbai	Kongbai	N	1	
21	11210033	Flange screw	Y	1	
22	11219636	Bracket	Y	1	

Water separator

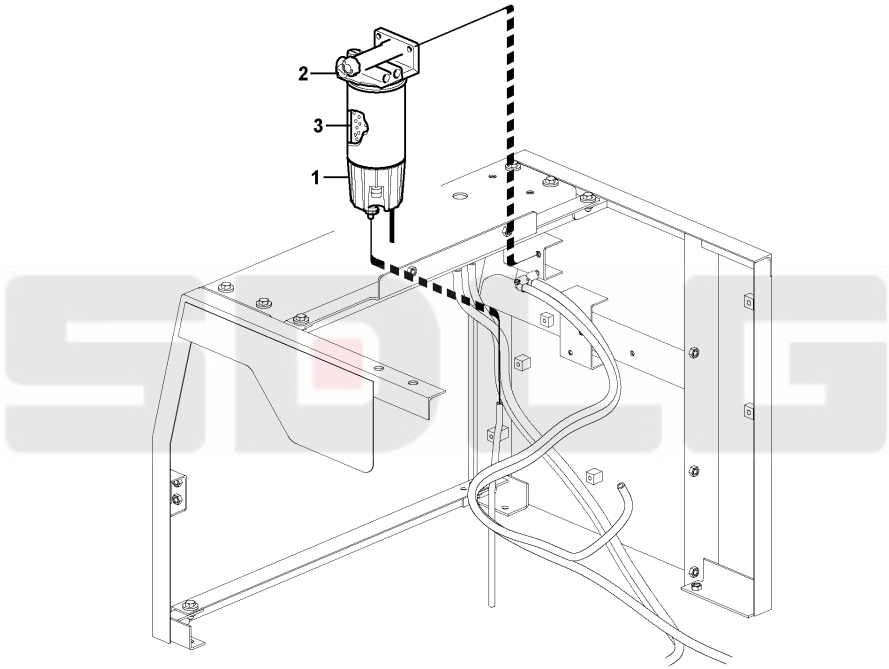

A6-6250

Key	Part No.	Description	Spare parts Y/N	Qty	Remarks
1	11214807	Bowl	Y	1	
2	11213157	Filter housing	Y	1	
3	11214252	Filter	Y	1	
4	11214466	Water separator	Y	1	

Exhaust system

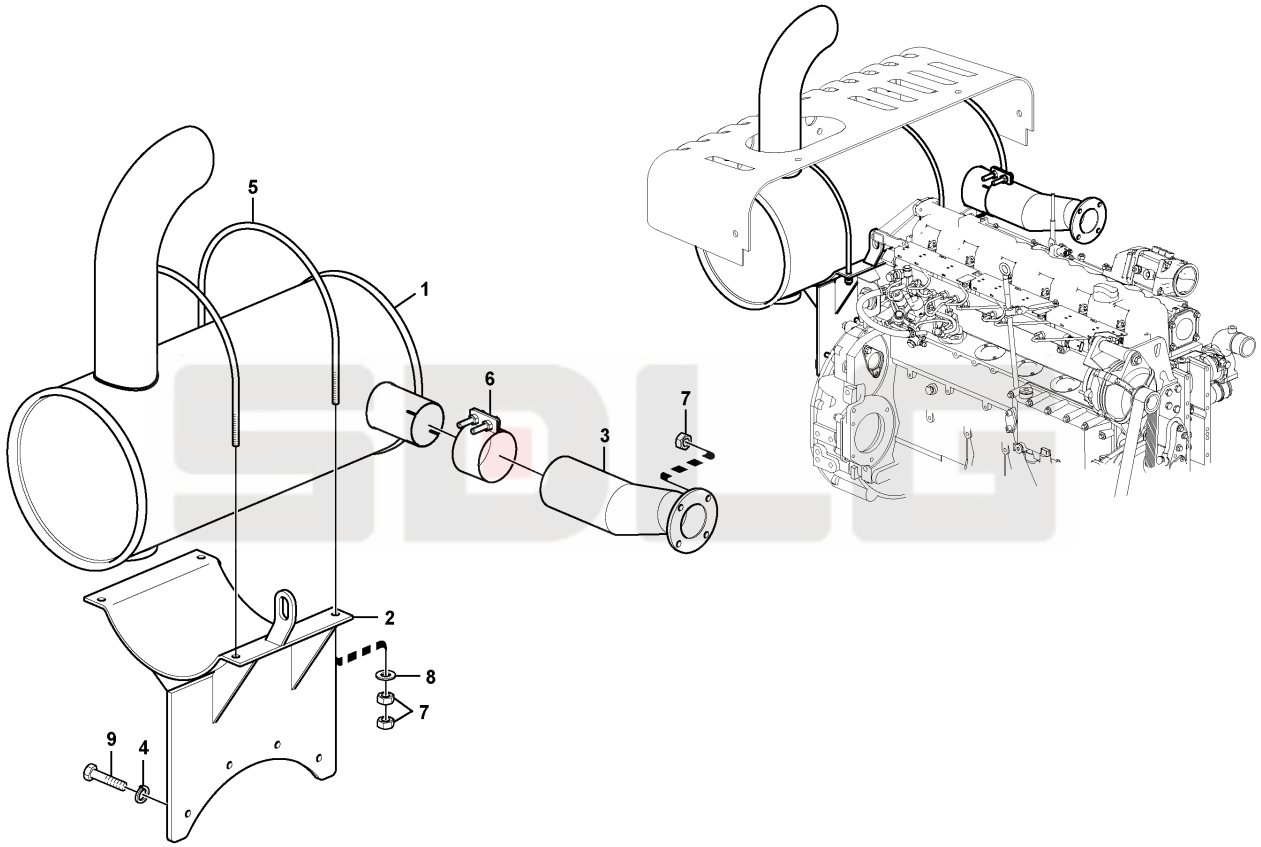

A7-6250

Key	Part No.	Description	Spare parts Y/N	Qty	Remarks
1	11212313	Muffler	Y	1	
2	11212360	Bracket	Y	1	
3	11212349	Pipe	Y	1	
4	11210064	Spring washer	Y	4	
5	11212303	U-bolt	Y	2	
6	11212302	Clamp	Y	1	
7	11210130	Hexagon nut	Y	12	
8	11210197	Plain washer	Y	4	
9	11212283	Hexagon screw	Y	4	

Air inlet system

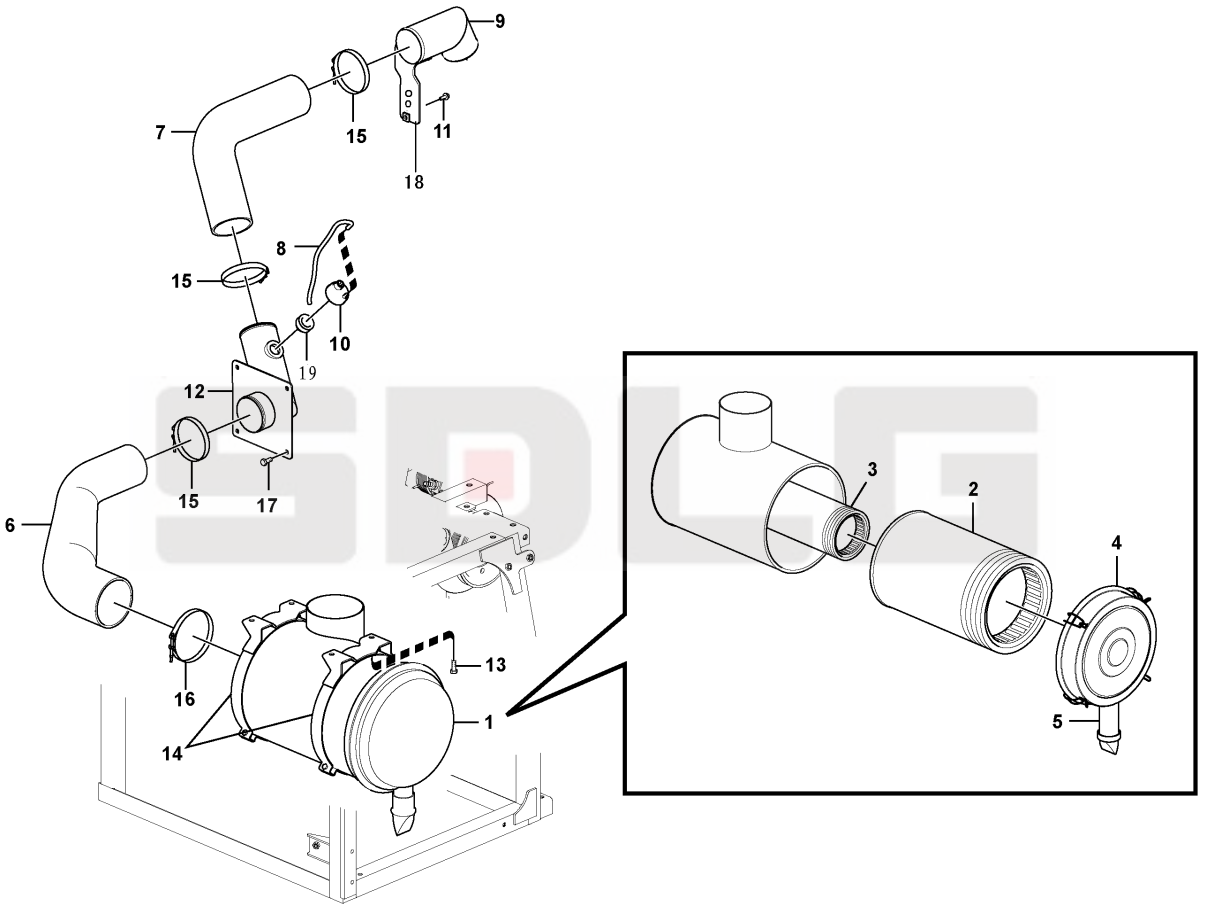

Key	Part No.	Description	Spare parts Y/N	Qty	Remarks
1	11212346	Air cleaner	Y	1	
2	4110000763001	Air filter insert	Y	1	
3	4110000763002	Air filter insert	Y	1	
4	11212298	Cover	N	1	
5	11212288	Valve	Y	1	
6	11214452	Hose	Y	1	
7	11212354	Hose	Y	1	
8	11210054	Hose	Y	1	
9	11212904	Tube	Y	1	
10	11211144	Vacuum switch	Y	1	
11	11210039	Flange screw	Y	2	
12	11212332	Tube	N	1	
13	11210032	Flange screw	Y	4	
14	11212365	Clamp	Y	2	
15	11211650	Clamp	N	3	
16	11211651	Clamp	N	1	
17	11210034	Flange screw	Y	4	
18	11212905	Bracket	Y	1	
19	11210293	Connector	Y	1	

Air inlet system

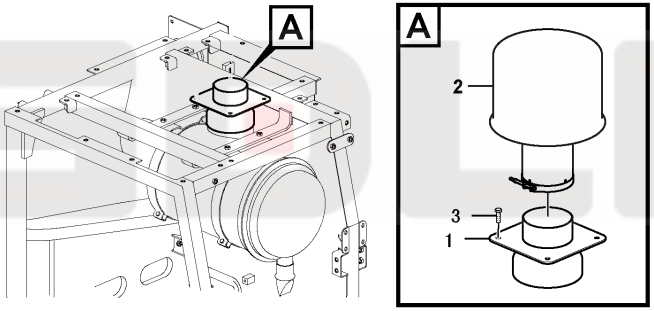

A9-6250

Key	Part No.	Description	Spare parts Y/N	Qty	Remarks
1	11212296	Connector	Y	1	
2	11212299	Pre-cleaner	N	1	
3	11210036	Flange screw	Y	4	
4	11212339	Impeller	Y	1	
5	11212340	Clamp	N	1	

Charge air cooler

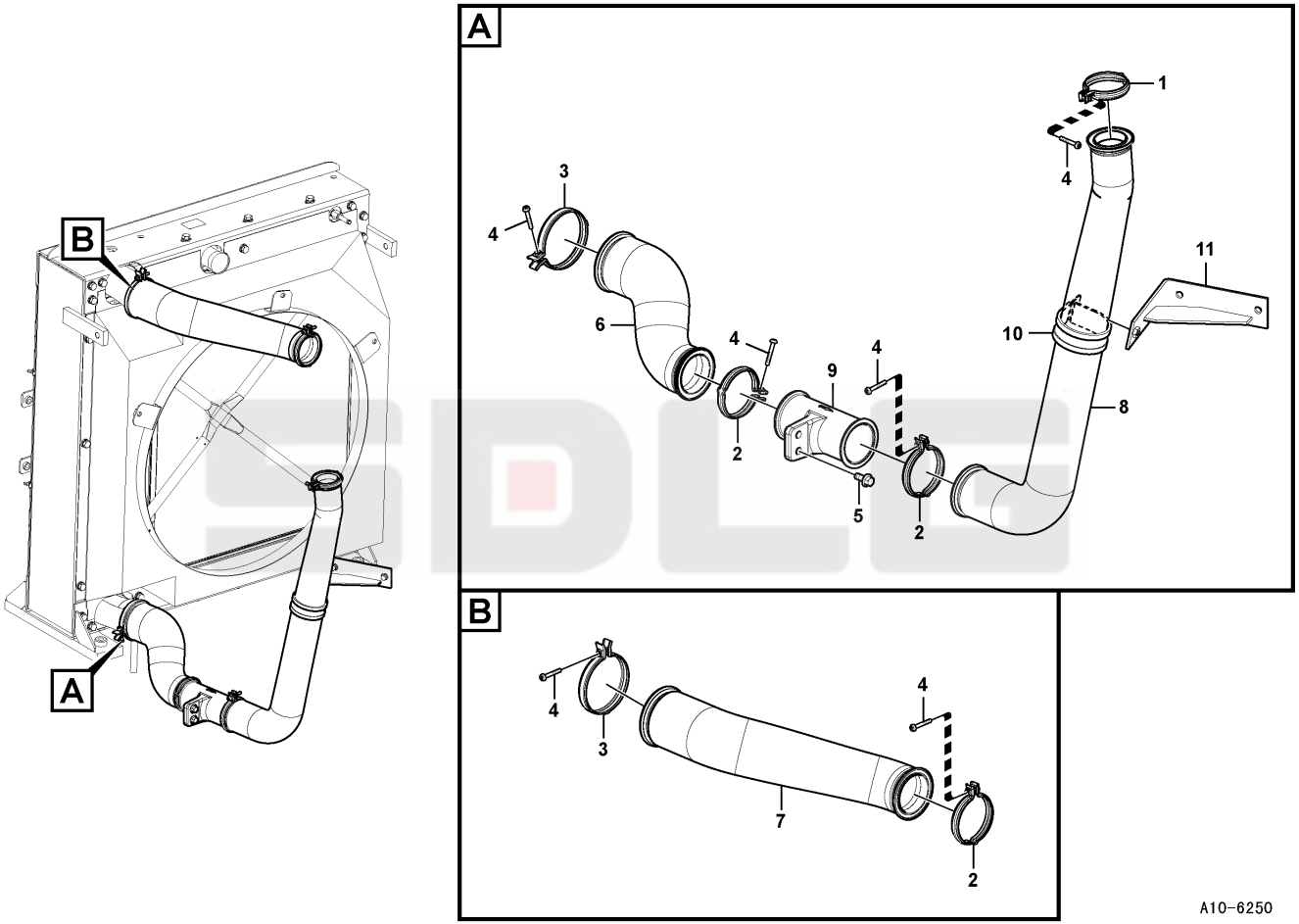

Key	Part No.	Description	Spare parts Y/N	Qty	Remarks
1	11211648	Clamp	Y	1	
2	11212278	Clamp	Y	2	
3	11212343	Clamp	Y	2	
4	11210091	Six point socket screw	Y	4	
5	11210032	Flange screw	Y	2	
6	11217776	Hose	Y	1	
7	11217772	Hose	Y	1	
8	11217775	Hose	Y	1	
9	kongbai	Kongbai	N	1	
10	11212901	Clip	Y	1	
11	11212902	Bracket	Y	1	

Cooling system

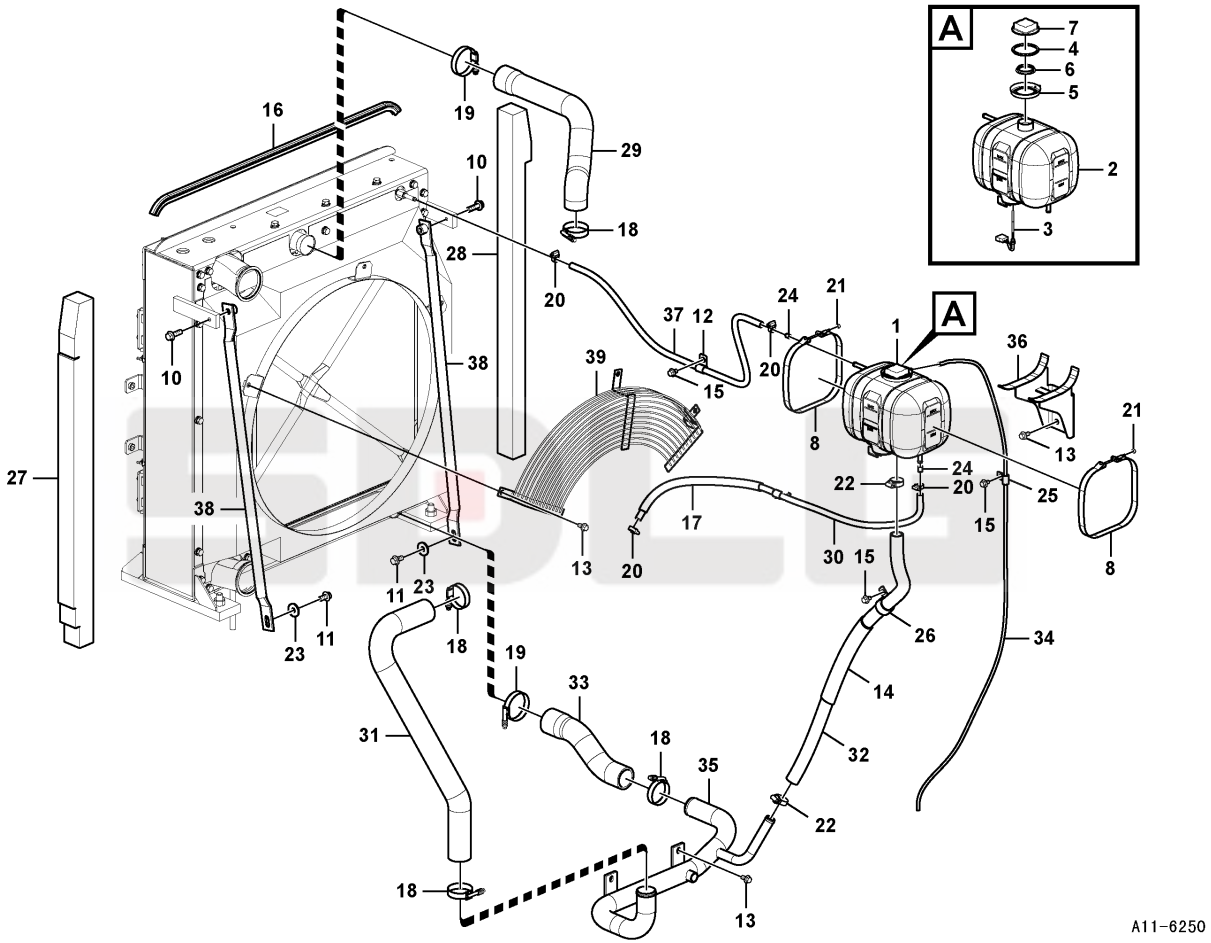

Key	Part No.	Description	Spare parts Y/N	Qty	Remarks
1	11211142	Expansion tank	N	1	
2	11210234	Expansion tank	N	1	
3	11210240	Level sensor	Y	1	
4	11210224	Sealing ring	Y	1	
5	11210226	Collar	Y	1	
6	11210225	Sealing ring	Y	1	
7	11211145	Pressure cap	N	1	
8	11210227	Tensioning band	Y	2	
9	14401945	Bracket	Y	1	
10	11214778	Screw	N	2	
11	11210040	Flange screw	Y	2	
12	11211655	Insulating clip	Y	1	
13	11210034	Flange screw	Y	9	
14	11212314	Guard	Y	1	
15	11210036	Flange screw	Y	3	
16	11212368	Weatherstrip	Y	1	
17	11211714	Cover	Y	1	
18	11211136	Hose clamp	Y	4	
19	11211137	Hose clamp	Y	2	
20	11210026	Hose clamp	Y	4	
21	11211629	Lock nut	Y	2	
22	11210027	Hose clamp	Y	2	
23	11210695	Washer	Y	2	
24	11210232	Restriction	Y	2	
25	11210254	Clip	Y	1	
26	11210260	Clip	Y	1	
27	kongbai	Kongbai	N	1	
28	kongbai	Kongbai	N	1	
29	11212355	Hose	Y	1	
30	11216862	Hose	N	1	

Cooling system

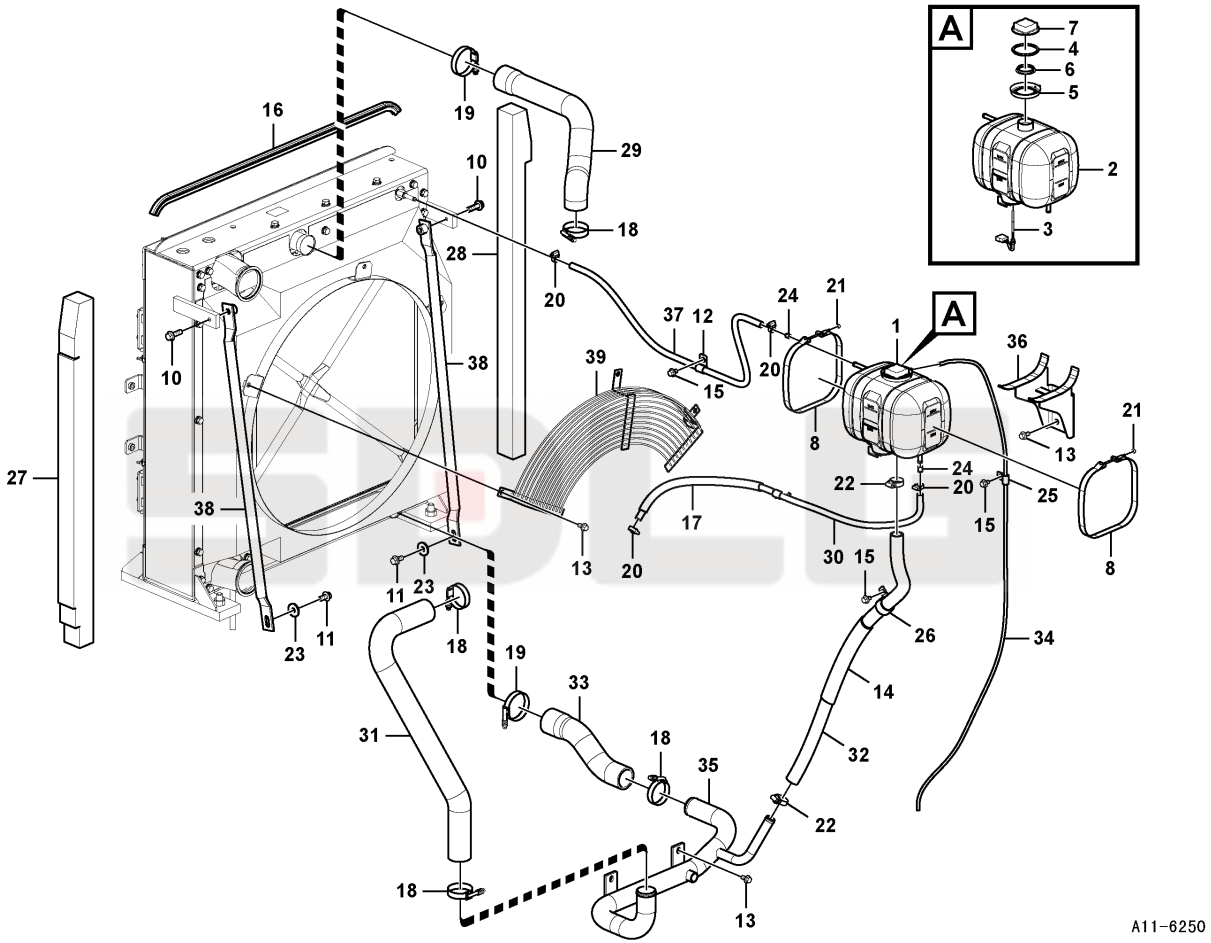

Key	Part No.	Description	Spare parts Y/N	Qty	Remarks
31	11212357	Hose	Y	1	
32	11212341	Hose	Y	1	
33	11216849	Hose	Y	1	
34	11219130	Hose	Y	1	
35	11212321	Pipe	Y	1	
36	kongbai	Kongbai	N	1	
37	11216863	Hose	Y	1	
38	kongbai	Kongbai	N	2	
39	kongbai	Kongbai	N	1	

Cooling system

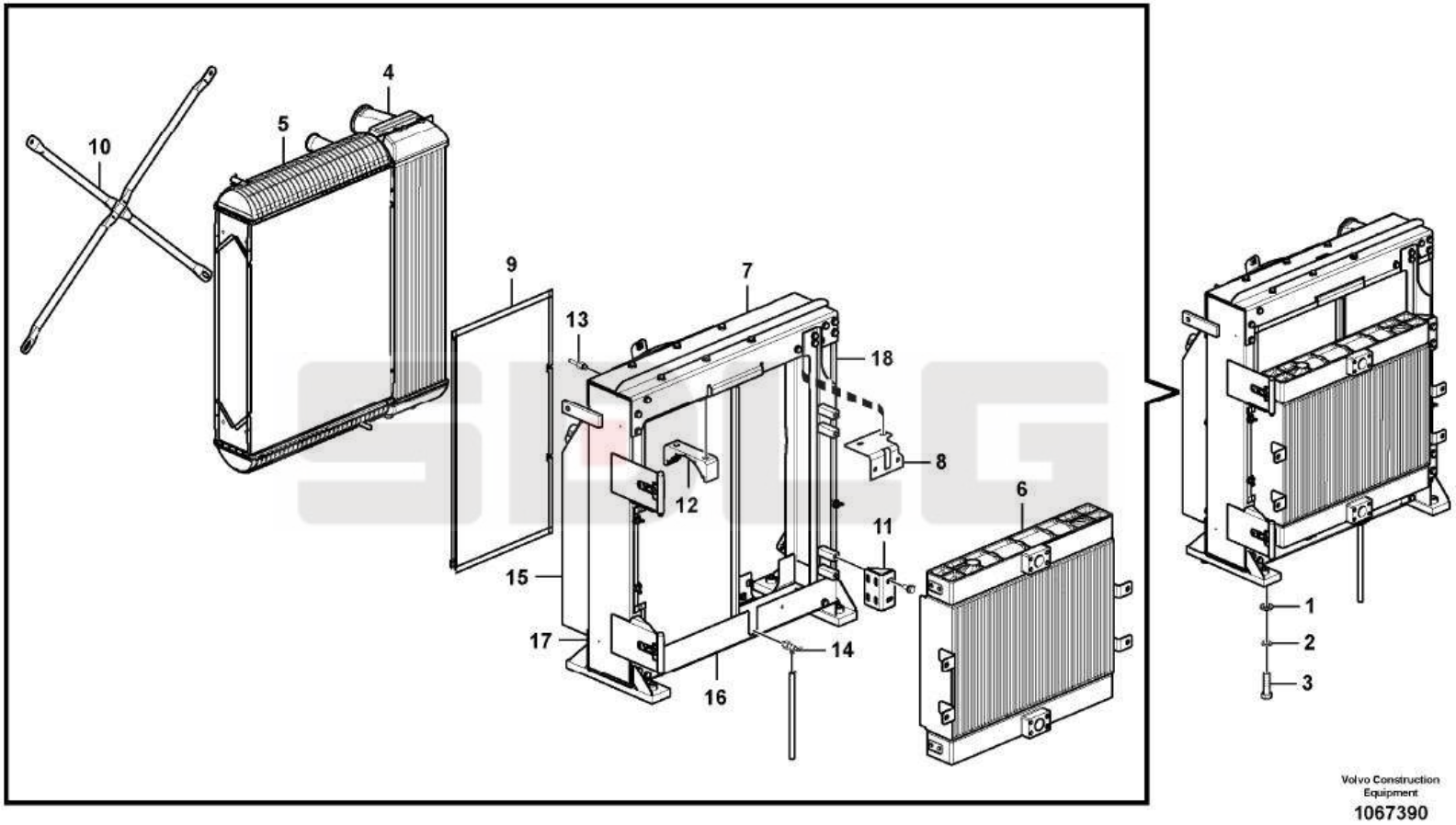

Key	Part No.	Description	Spare parts Y/N	Qty	Remarks
1	11210199	Plain washer	Y	4	
2	11210223	Hexagon screw	N	4	
3	11210067	Spring washer	Y	4	
4	11212277	Charge air cooler	Y	1	
5	11212285	Radiator	Y	1	
6	11212311	Oil cooler	Y	1	
7	11212316	Channel housing	Y	1	
8	11219848	Bracket	N	1	
9	11212320	Net	Y	1	
10	11212317	Tie rod	Y	2	
11	11212318	Bracket	Y	2	
12	11212276	Rubber damper	Y	6	
13	11212275	Bleeder nipple	Y	1	
14	11212287	Valve	Y	1	
15	11214360	Fan shroud	N	1	
16	11219849	Bracket	Y	1	
17	11219850	Bracket	Y	1	
18	11219851	Bracket	Y	1	
19	11214365	Radiator	Y	1	

Radiator fan

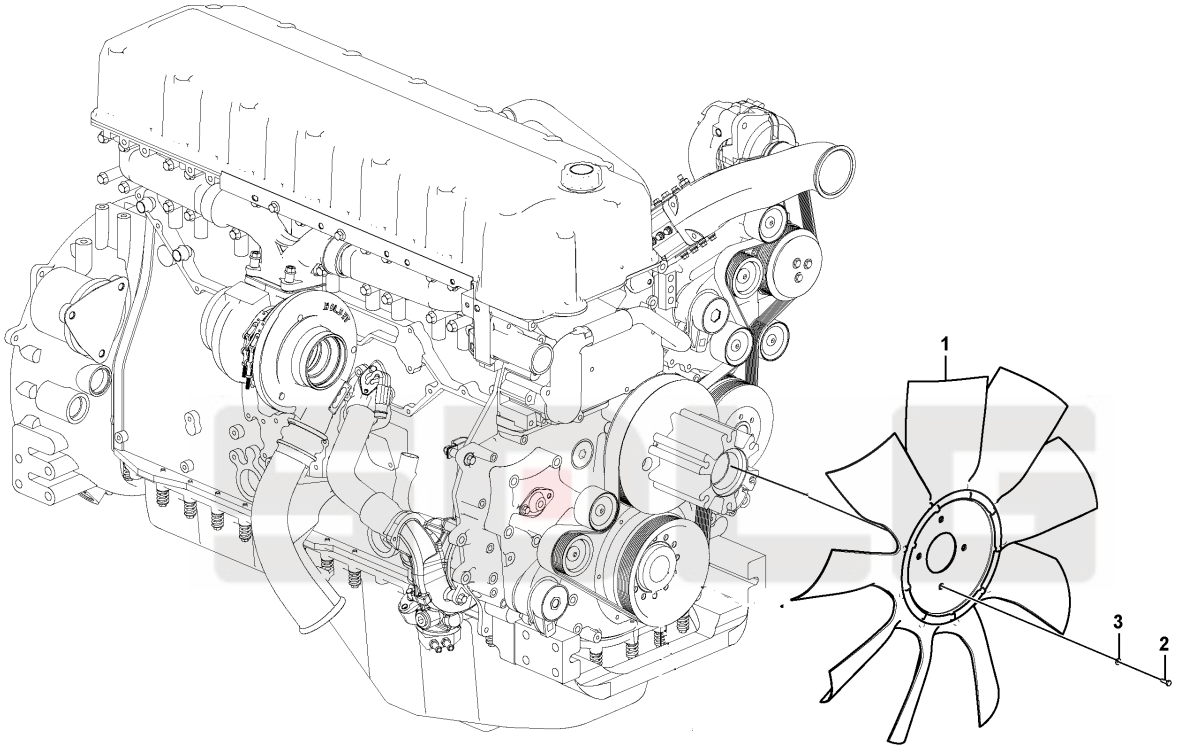

A13-6250

Key	Part No.	Description	Spare parts Y/N	Qty	Remarks
1	4110001566	Fan	Y	1	
2	11214319	Hexagon screw	Y	4	
3	11214768	Washer	N	4	

Piston cooling jet

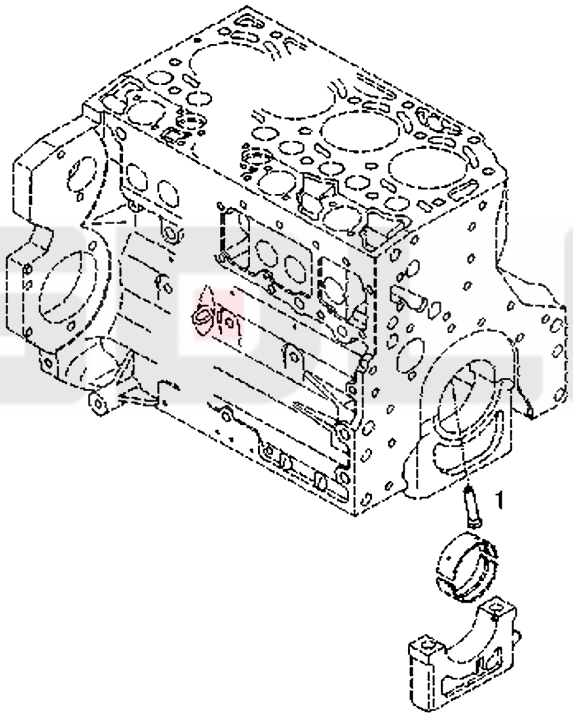

A14-6250

Key	Part No.	Description	Spare parts Y/N	Qty	Remarks
1	4110000727106	Piston cooling jet	Y	6	

SDLG

Crankshaft

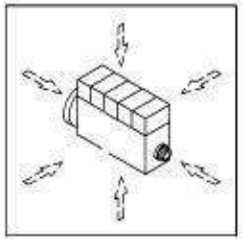

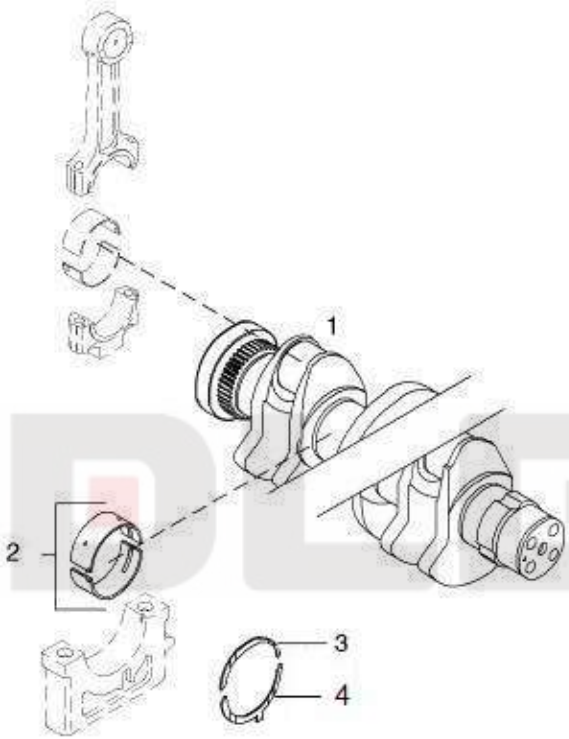

002 ©

Key	Part No.	Description	Spare parts Y/N	Qty	Remarks
1	4110000970056	Crankshaft	N	1	
2	4110000970008	Bearing shell kit	Y	14	
3	4110000970009	Thrust washer	Y	2	
4	4110000970010	Thrust washer	Y	2	

Connecting rod kit

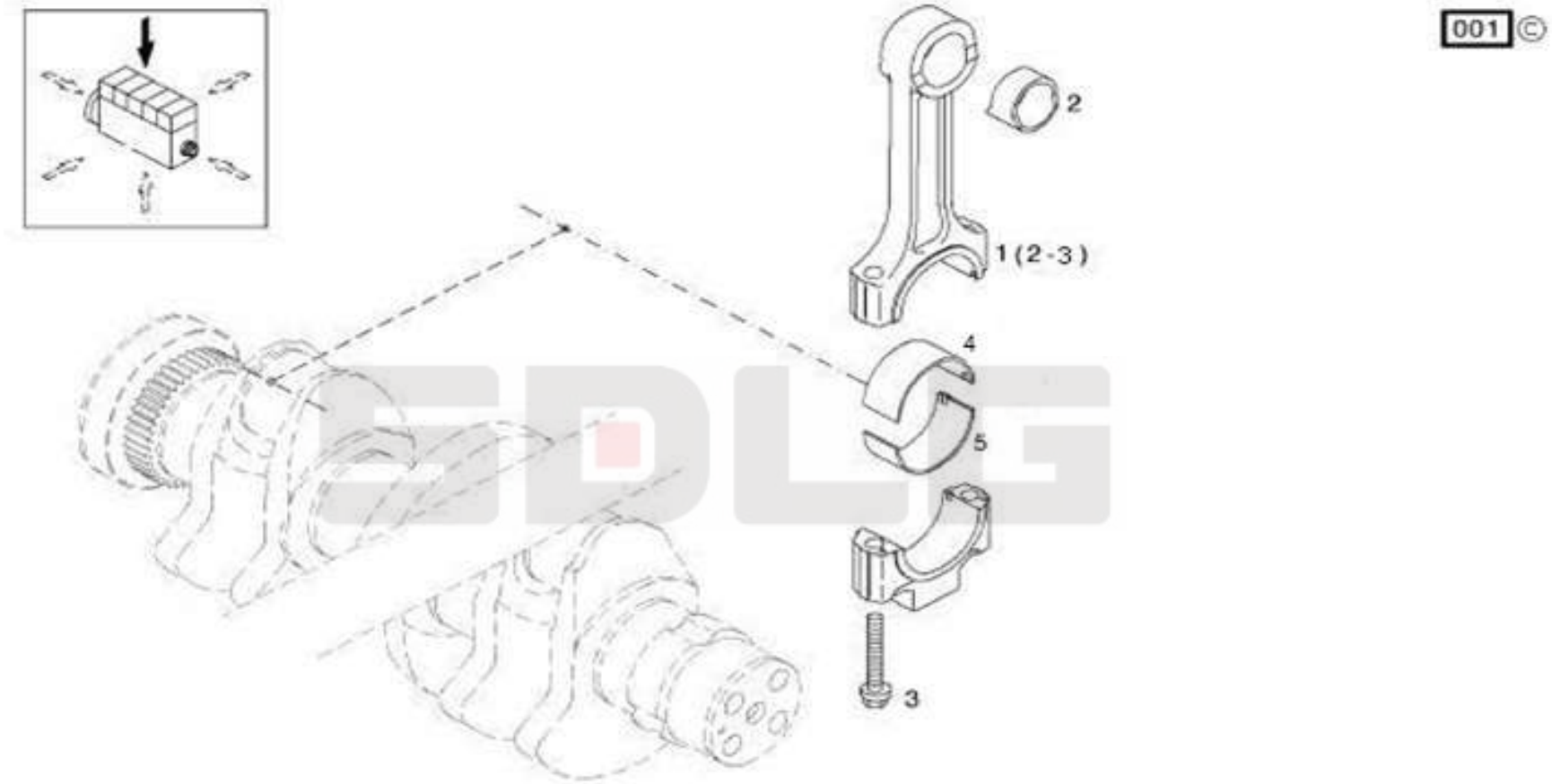

Key	Part No.	Description	Spare parts Y/N	Qty	Remarks
1	4110001841001	Connecting rod	N	1	
2	4110001900021	Screw	N	12	
3	4110000970004	Bearing shell	Y	6	
4	4110000970005	Bearing shell	Y	6	

Cylinder piston

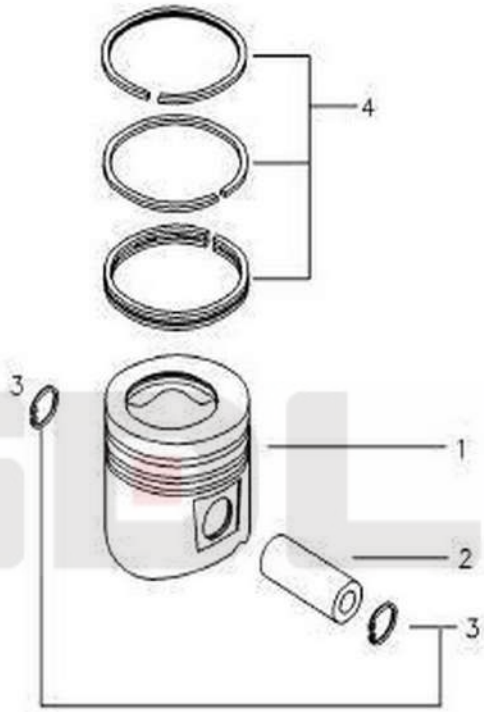

A17-6250

Key	Part No.	Description	Spare parts Y/N	Qty	Remarks
1	4110001596001	Piston	N	6	
2	4110000970002	Piston pin	Y	6	
3	4110000970006	Retaining ring	Y	12	
4	4110002513001	Piston ring kit	Y	6	

Valve drive device

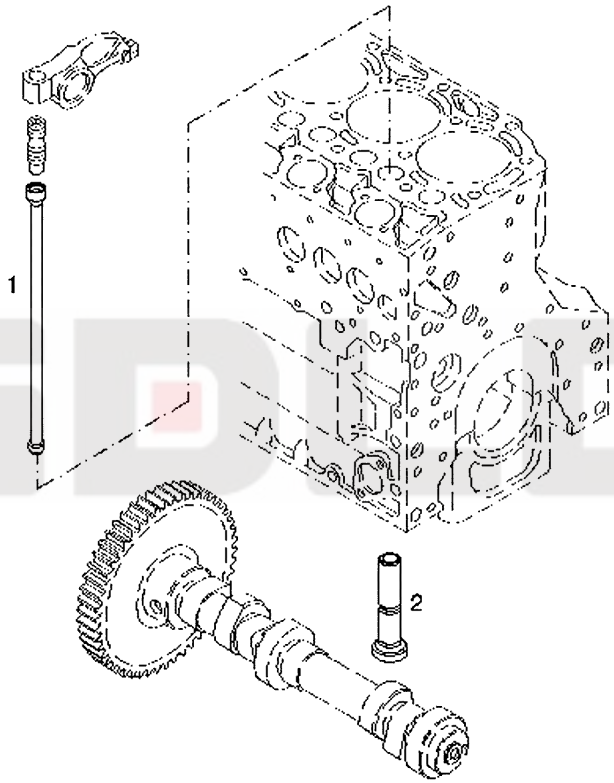

A18-6250

Key	Part No.	Description	Spare parts Y/N	Qty	Remarks
1	4110000970068	Push rod	Y	12	
2	4110000970069	Tappet	Y	12	

Installation kit

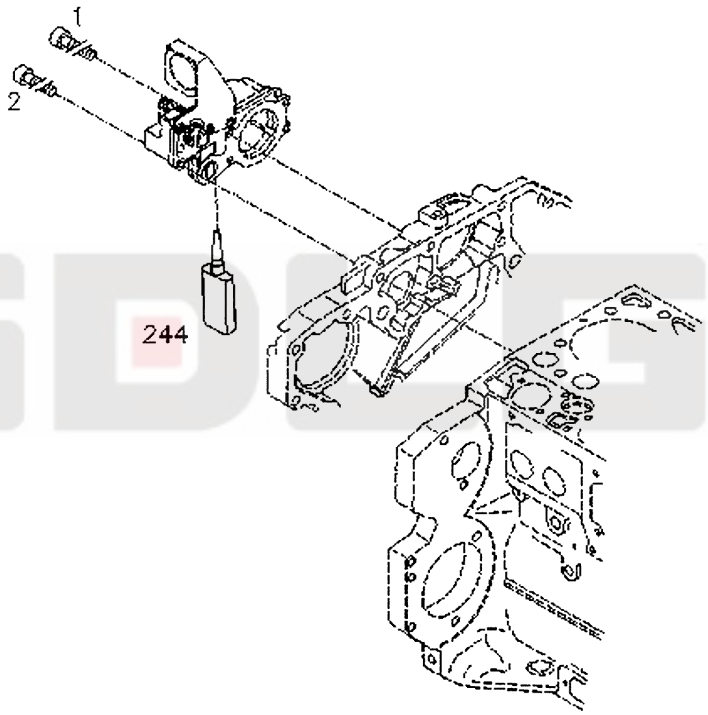

A19-6250

Key	Part No.	Description	Spare parts Y/N	Qty	Remarks
1	4110000727174	Screw	Y	2	
2	4110000727173	Screw	Y	3	

Actuator

Key	Part No.	Description	Spare parts Y/N	Qty	Remarks
1	4110000727096	Actuator	Y	1	

Cylinder block assembly

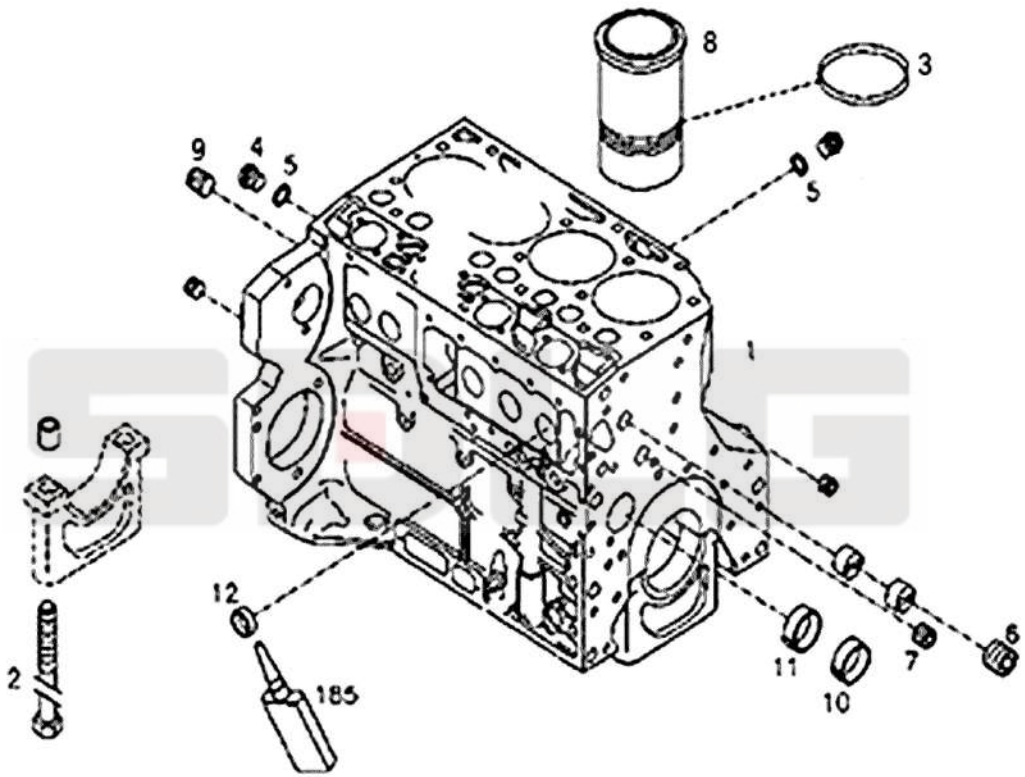

Key	Part No.	Description	Spare parts Y/N	Qty	Remarks
1	4110001597029	Cylinder liner kit	Y	1	
2	4110000970038	Screw	Y	14	
3	4110000970024	O-ring	Y	12	
4	4110000509020	Plug	Y	2	
5	4110001424037	Sealing ring	N	4	
6	4110000727075	Plug	Y	1	
7	4110000727132	Plug	N	1	
8	4110001597027	Cylinder liner	Y	6	
9	4110001596002	Plug	Y	1	
10	4110000970061	Bearing bushing	Y	6	
11	4110000970062	Bearing bushing	Y	1	
12	4110000509017	Plug	Y	10	

Pressure limiting valve

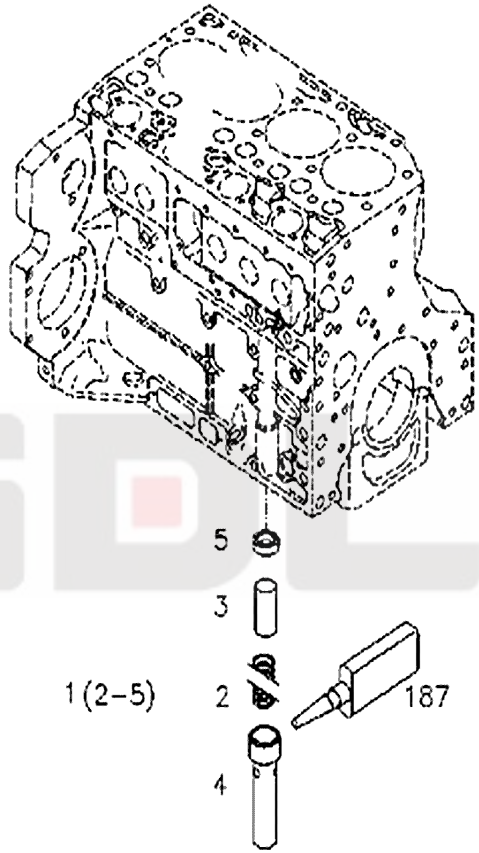

A22-6250

Key	Part No.	Description	Spare parts Y/N	Qty	Remarks
1	4110000970088	Pressure regulator	Y	1	

Rocker arm kit

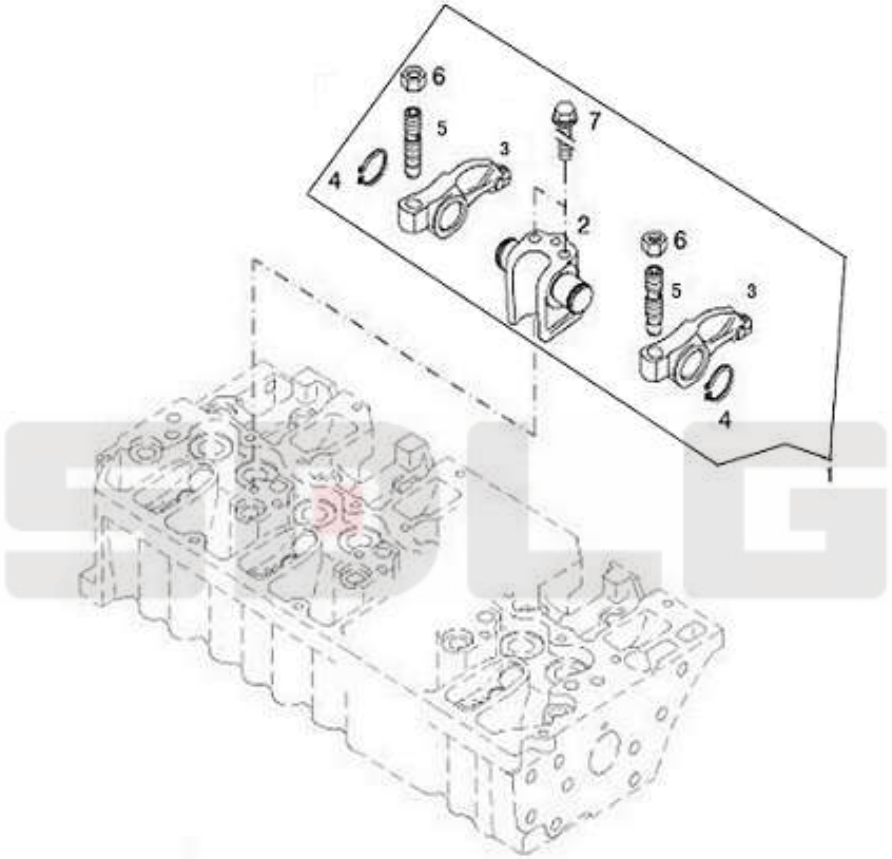

A23-6250

Key	Part No.	Description	Spare parts Y/N	Qty	Remarks
1	4110000970073	Rocker arm	Y	5	
2	4110000970074	Support	N	1	
3	4110000970077	Rocker arm	N	1	
4	4110001167114	Retaining ring	N	1	
5	4110000970078	Adjusting screw	N	1	
6	4110000509095	Nut	N	1	
7	4110000727035	Screw	Y	2	

Rocker arm kit

Key	Part No.	Description	Spare parts Y/N	Qty	Remarks
1	4110000970075	Rocker arm	Y	1	
2	4110000970072	Bracket	N	1	
3	4110000970077	Rocker arm	N	1	
4	4110001167114	Retaining ring	N	1	
5	4110000970078	Adjusting screw	N	1	
6	4110000509095	Nut	N	1	
7	4110000727035	Screw	Y	2	

Rocker arm kit

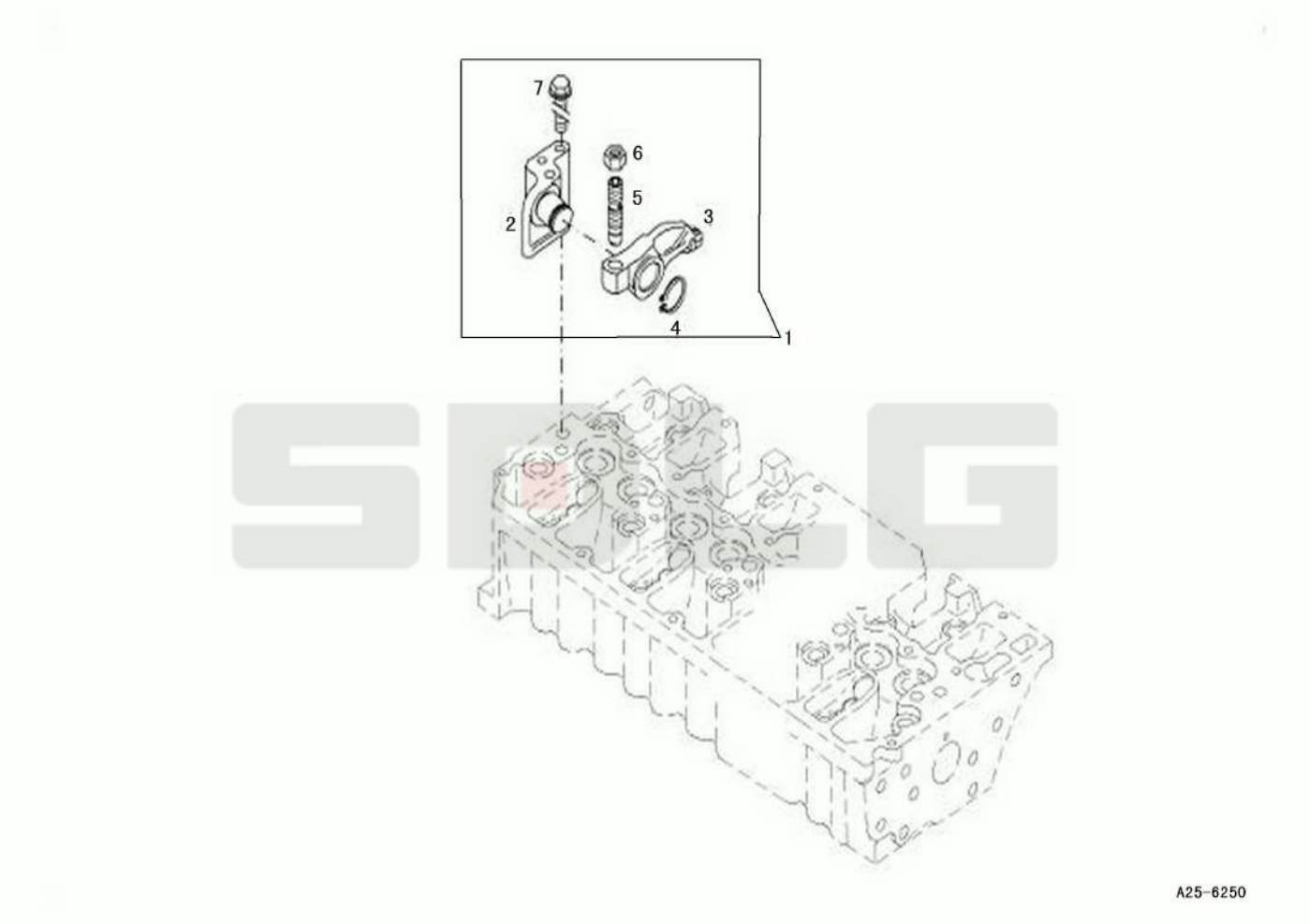

Key	Part No.	Description	Spare parts Y/N	Qty	Remarks
1	4110000970075	Rocker arm	Y	1	
2	4110000970076	Bracket	N	1	
3	4110000970077	Rocker arm	N	1	
4	4110001167114	Retaining ring	N	1	
5	4110000970078	Adjusting screw	N	1	
6	4110000509095	Nut	N	1	
7	4110000727035	Screw	Y	2	

Installation kit

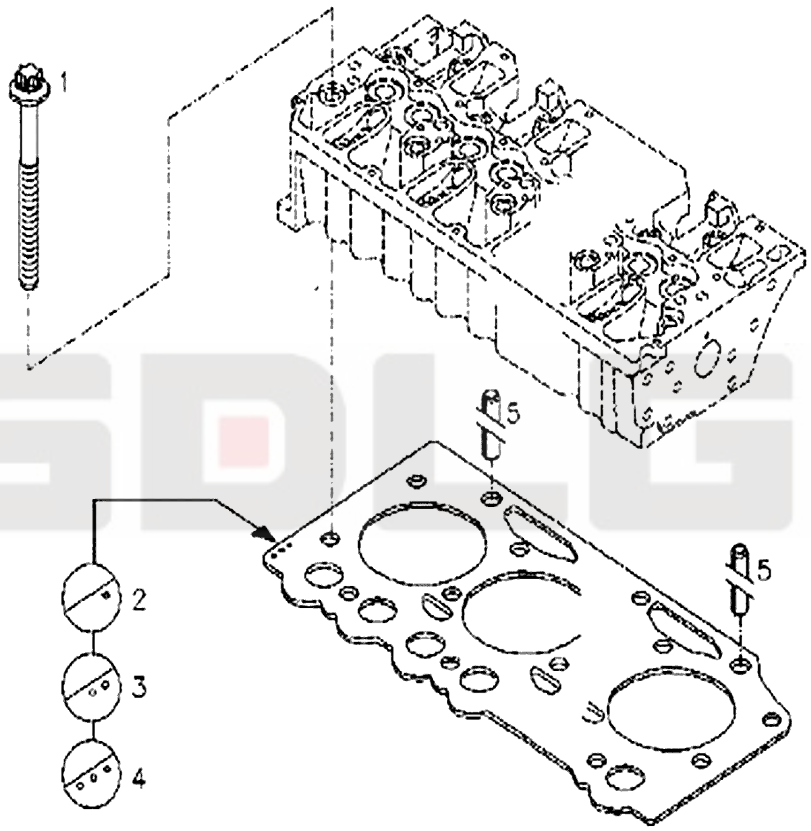

A26-6250

Key	Part No.	Description	Spare parts Y/N	Qty	Remarks
1	4110000970046	Screw	Y	26	
2	4110000970050	Cylinder head gasket	Y	1	
3	4110000970051	Cylinder head gasket	Y	1	
4	4110000970052	Cylinder head gasket	Y	1	
5	4110000727077	Spring pin	Y	2	

Cylinder head assembly

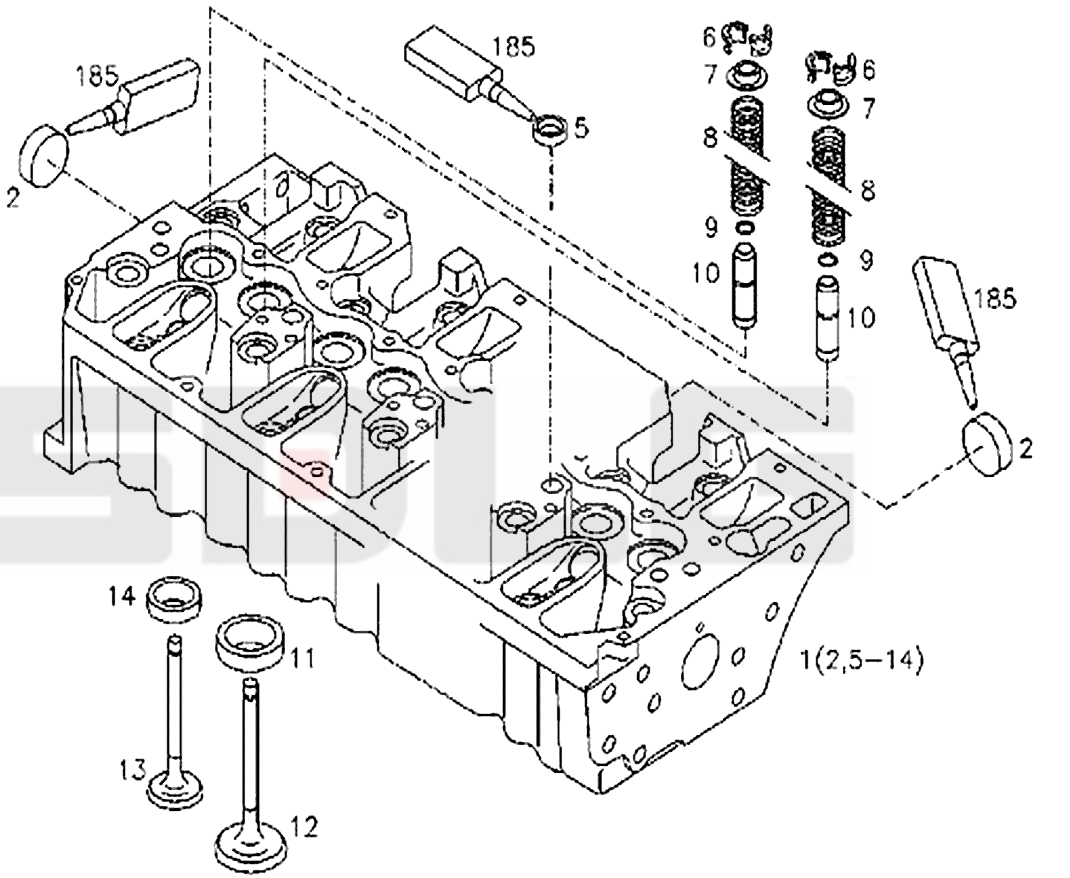

Key	Part No.	Description	Spare parts Y/N	Qty	Remarks
1	4110000970216	Cylinder head kit	Y	1	
2	4110000509248	Plug	Y	5	
3	kongbai	Kongbai	N	1	
4	kongbai	Kongbai	N	1	
5	4110000727004	Plug	Y	5	
6	4110001009055	Collet	Y	24	
7	4110000970066	Spring seat	Y	12	
8	4110000970065	Compression spring	Y	12	
9	4110002206003	Sealing ring	Y	1	
10	4110000970067	Valve guide	N	12	
11	4110000970070	Seat	Y	6	
12	4110000970063	Inlet valve	Y	6	
13	4110000970064	Exhaust valve	Y	6	
14	4110000970071	Valve seat	N	6	

Plug assembly

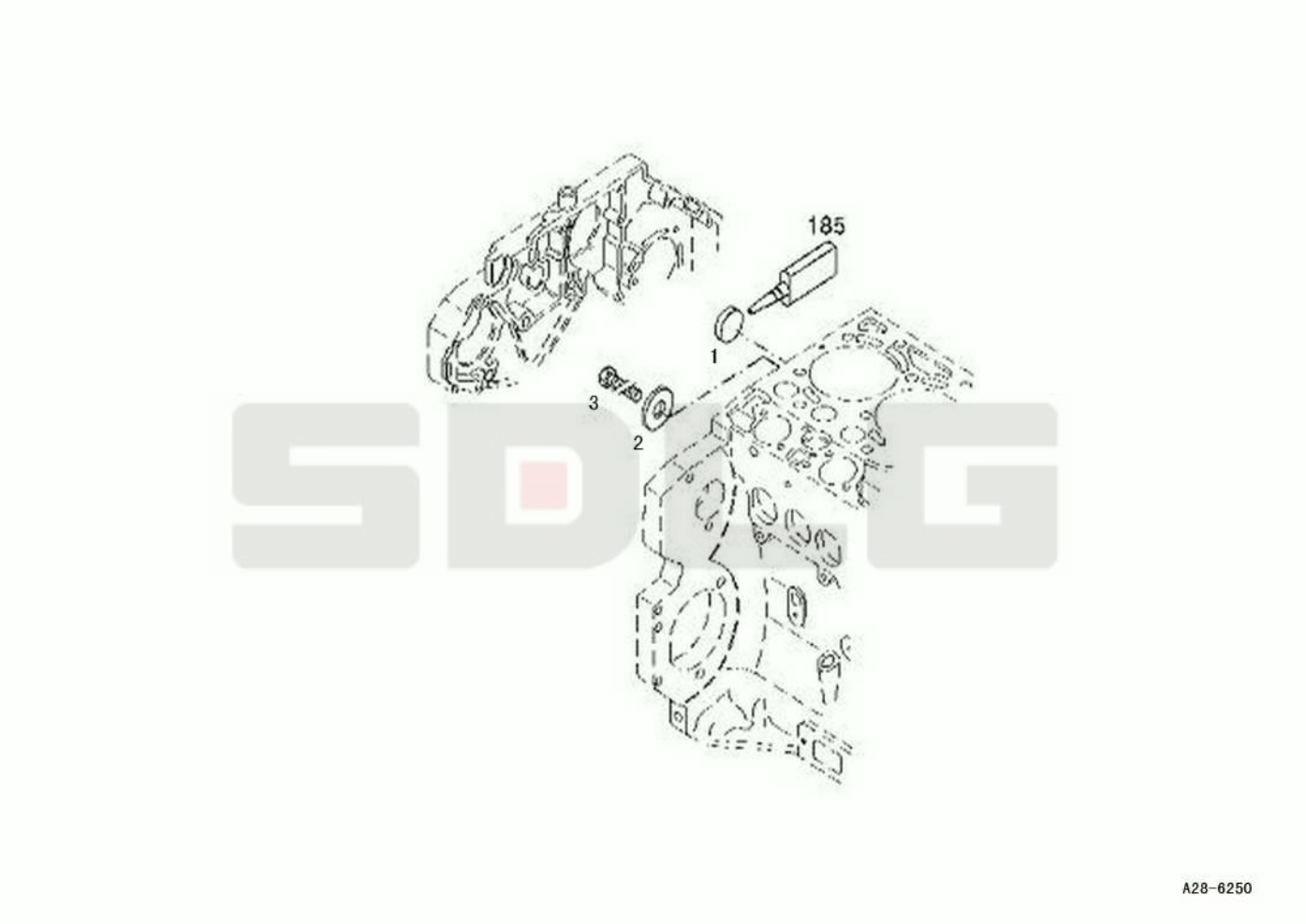

Key	Part No.	Description	Spare parts Y/N	Qty	Remarks
1	4110000970101	Core plug	Y	1	
2	4110000509226	Plain washer	Y	1	
3	4110000509227	Screw	Y	1	

Tappet

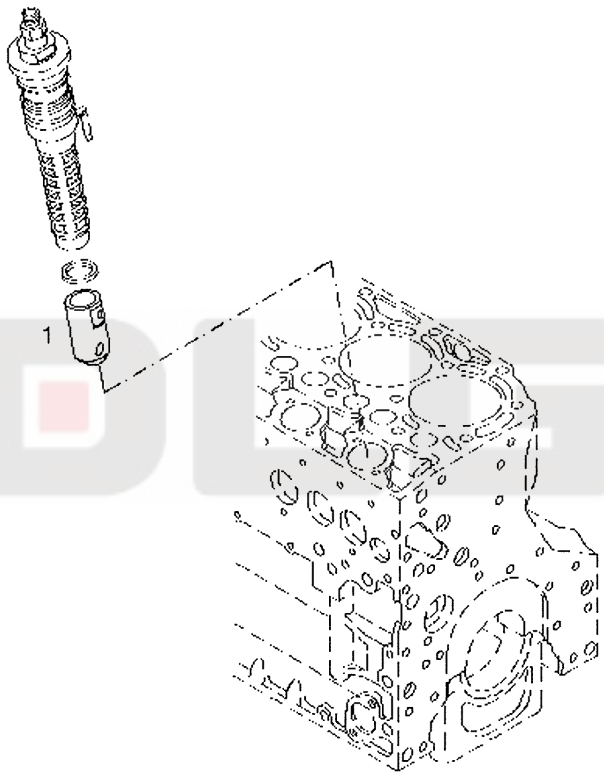

A29-6250

Key	Part No.	Description	Spare parts Y/N	Qty	Remarks
1	4110001007068	Tappet	N	6	

SDLG

Injection pump

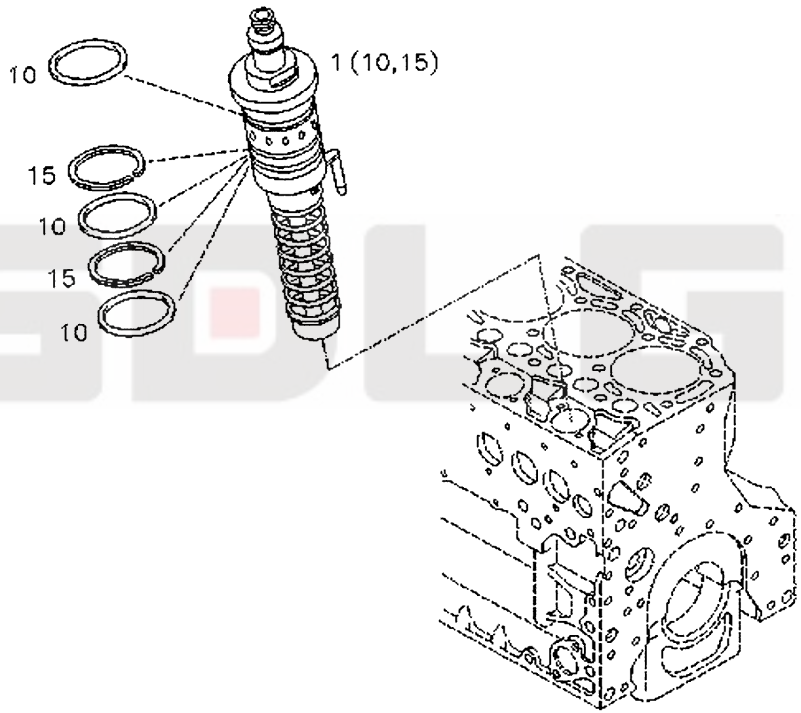

A30-6250

Key	Part No.	Description	Spare parts Y/N	Qty	Remarks
1	4110000970029	Unit injector	Y	6	

SDLG

Installation kit

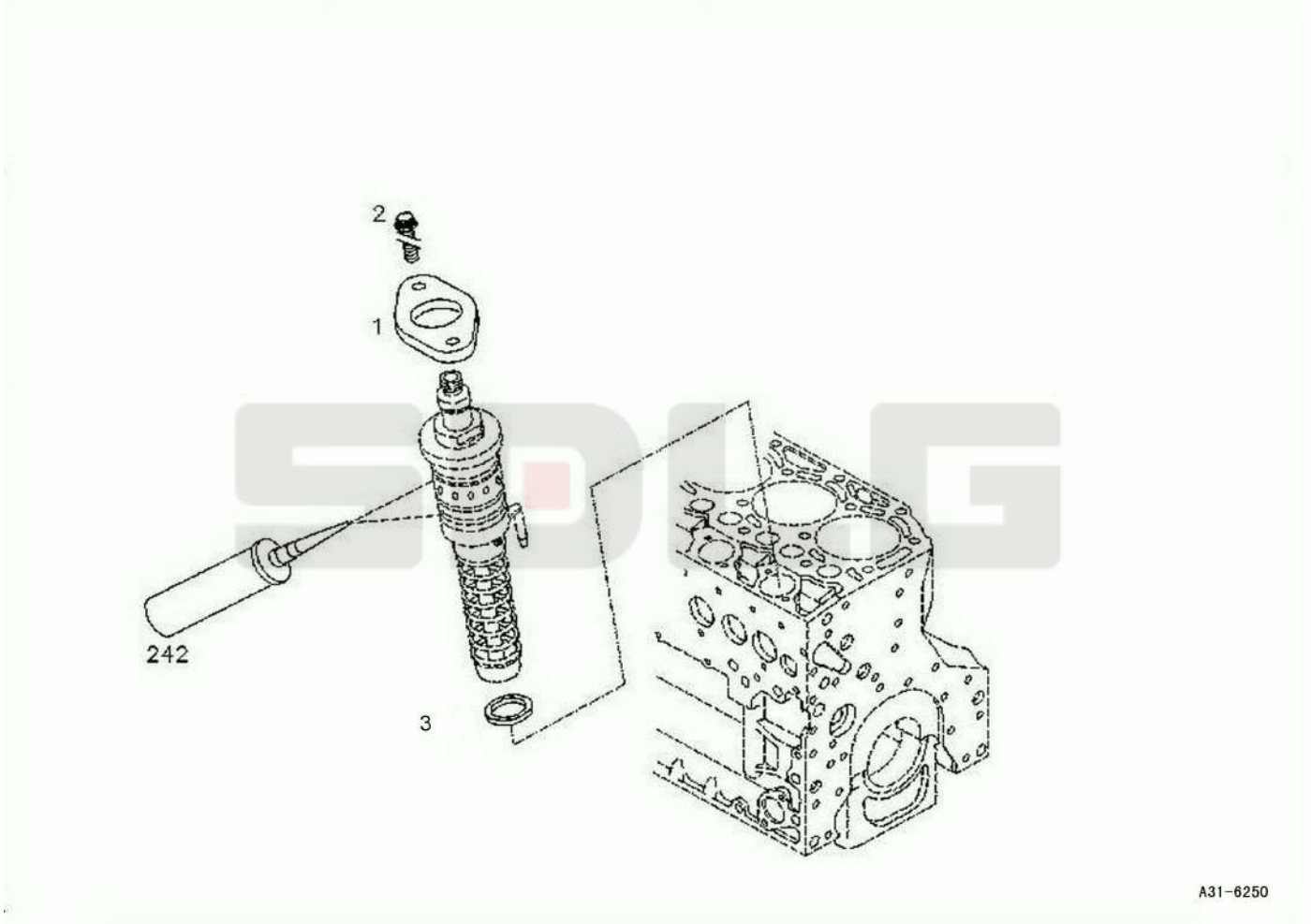

Key	Part No.	Description	Spare parts Y/N	Qty	Remarks
1	4110000727030	Flange	Y	6	
2	4110000727082	Screw	Y	12	
3	4110000727166	Shim	Y	6	

Gear rack

Key	Part No.	Description	Spare parts Y/N	Qty	Remarks
1	4110000970149	Control rod	Y	1	
2	4110000727029	Screw	Y	1	

Installation kit

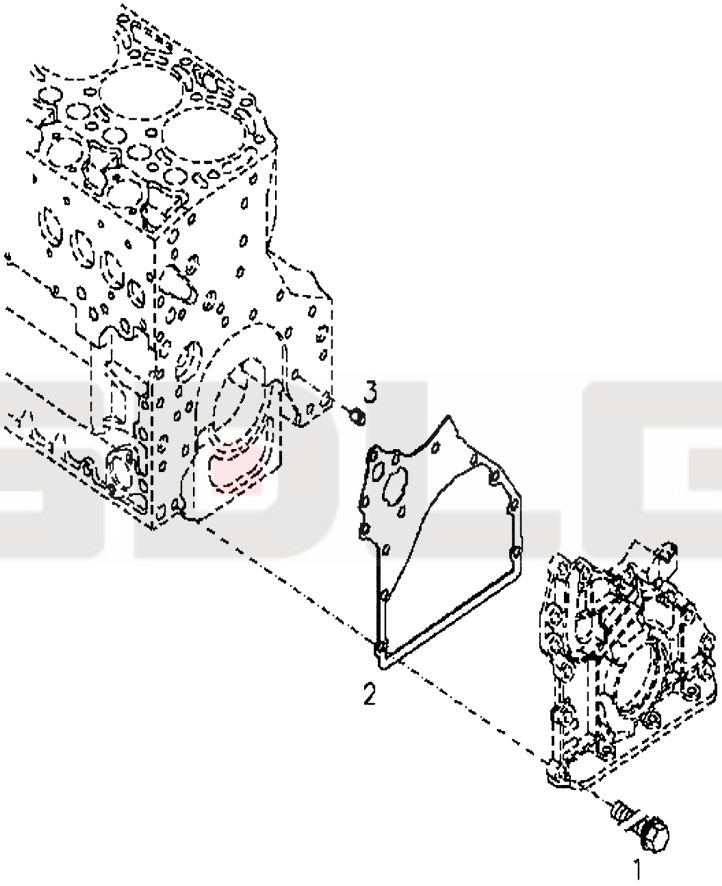

A33-6250

Key	Part No.	Description	Spare parts Y/N	Qty	Remarks
1	4110000509039	Bolt	Y	14	
2	4110000970013	Gasket	Y	1	
3	4110000727080	Spring pin	Y	1	

Cover

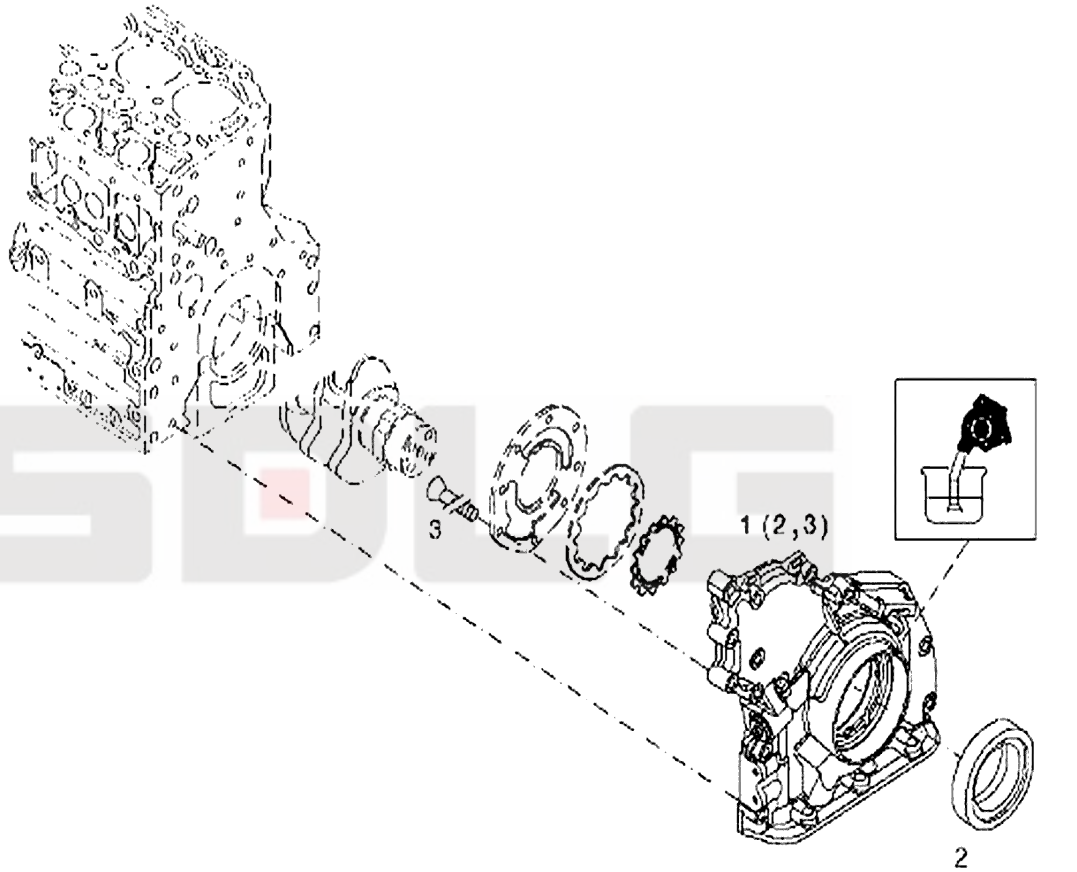

A34-6250

Key	Part No.	Description	Spare parts Y/N	Qty	Remarks
1	4110000970014	Gear housing cover	Y	1	
2	4110000970059	Lip seal	Y	1	

Camshaft

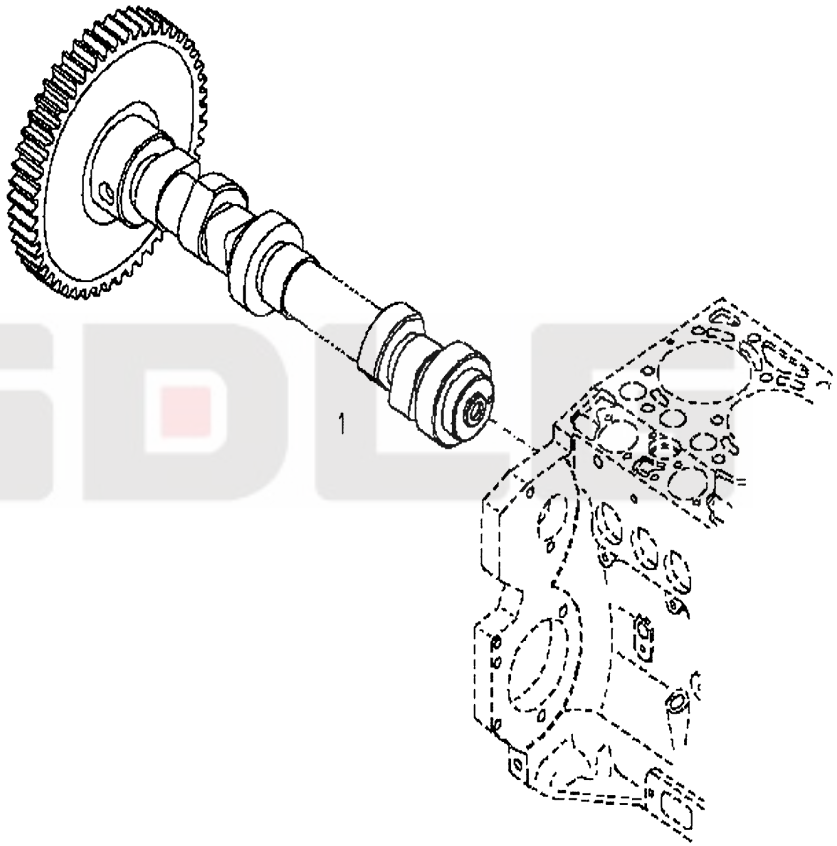

A35-6250

Key	Part No.	Description	Spare parts Y/N	Qty	Remarks
1	4110000970060	Camshaft	N	1	

Fuel pipe assembly

Key	Part No.	Description	Spare parts Y/N	Qty	Remarks
1	4110000970019	Fuel pipe	Y	6	

Fuel injection nozzle

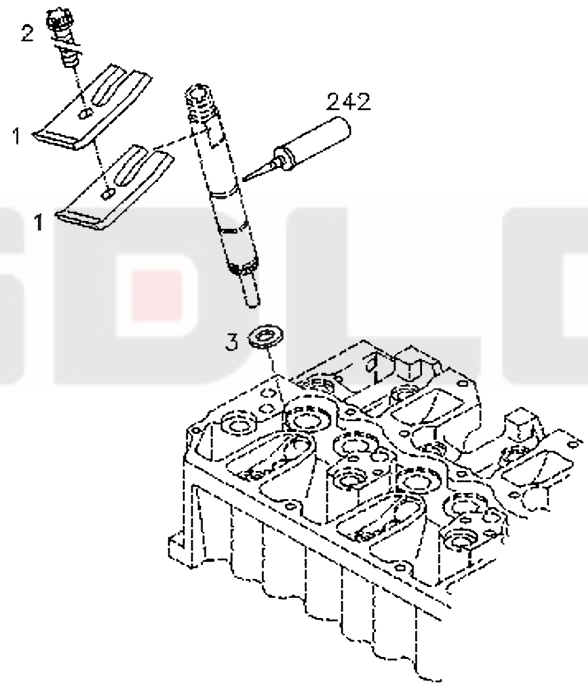

A37-6250

Key	Part No.	Description	Spare parts Y/N	Qty	Remarks
1	4110000509204	Yoke	Y	12	
2	4110000509205	Screw	Y	6	
3	4110000970018	Sealing ring	Y	6	

Fuel injection nozzle

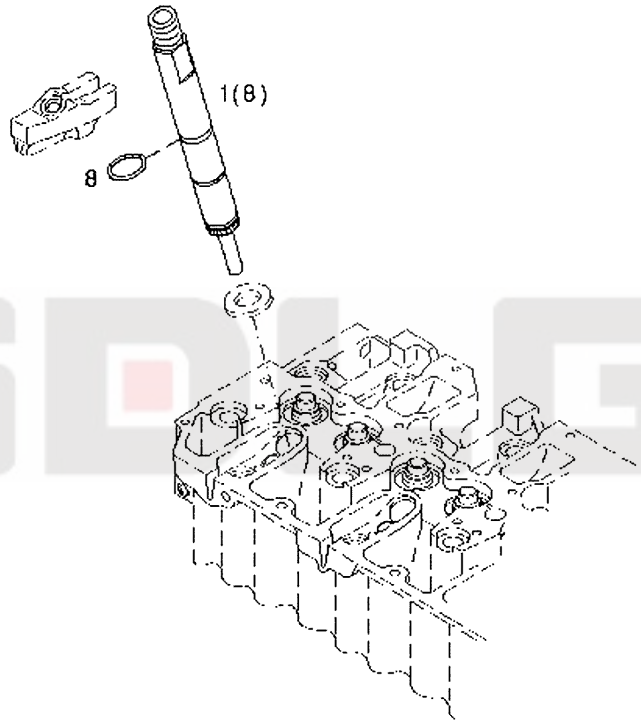

A38-6250

Key	Part No.	Description	Spare parts Y/N	Qty	Remarks
1	4110000970030	Injector	Y	6	

SDLG

Installation kit

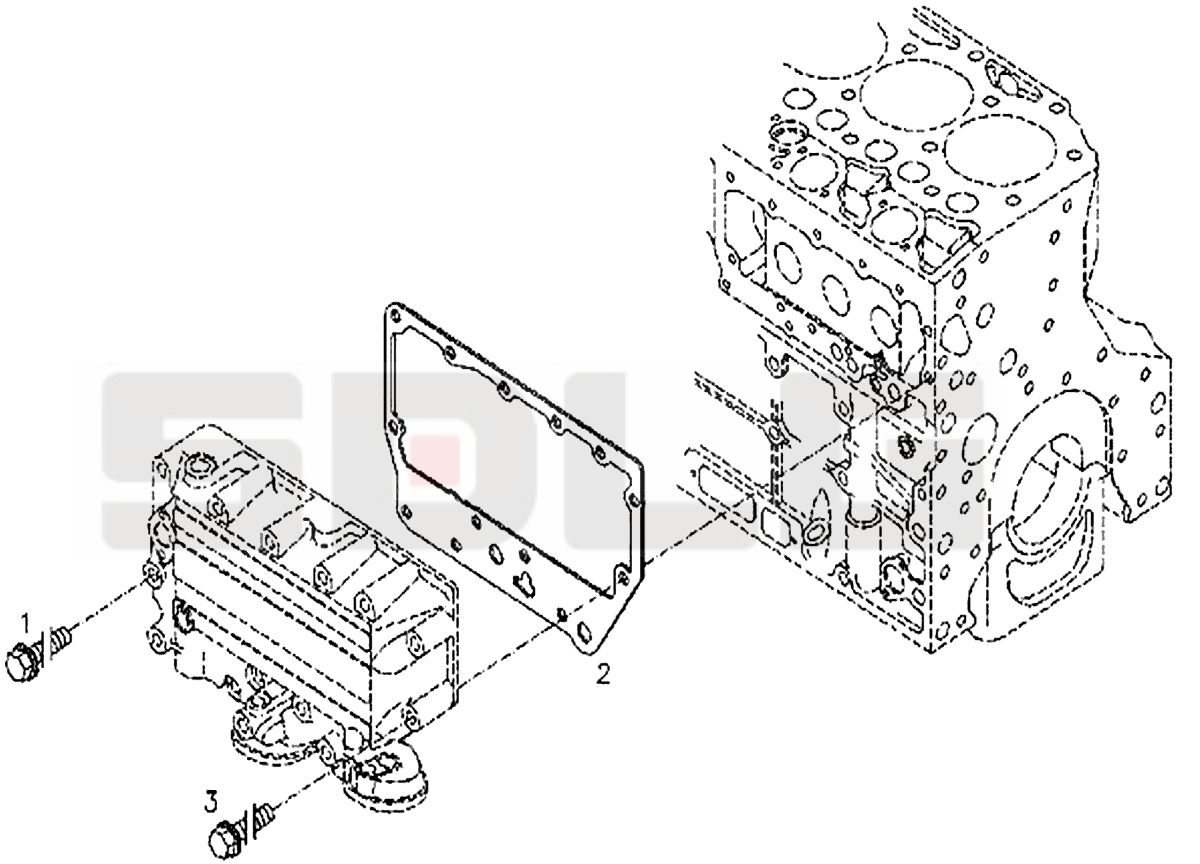

Key	Part No.	Description	Spare parts Y/N	Qty	Remarks
1	4110000509175	Screw	Y	10	
2	4110000970015	Gasket	Y	1	
3	4110000509187	Screw	N	3	

Oil cooler assembly

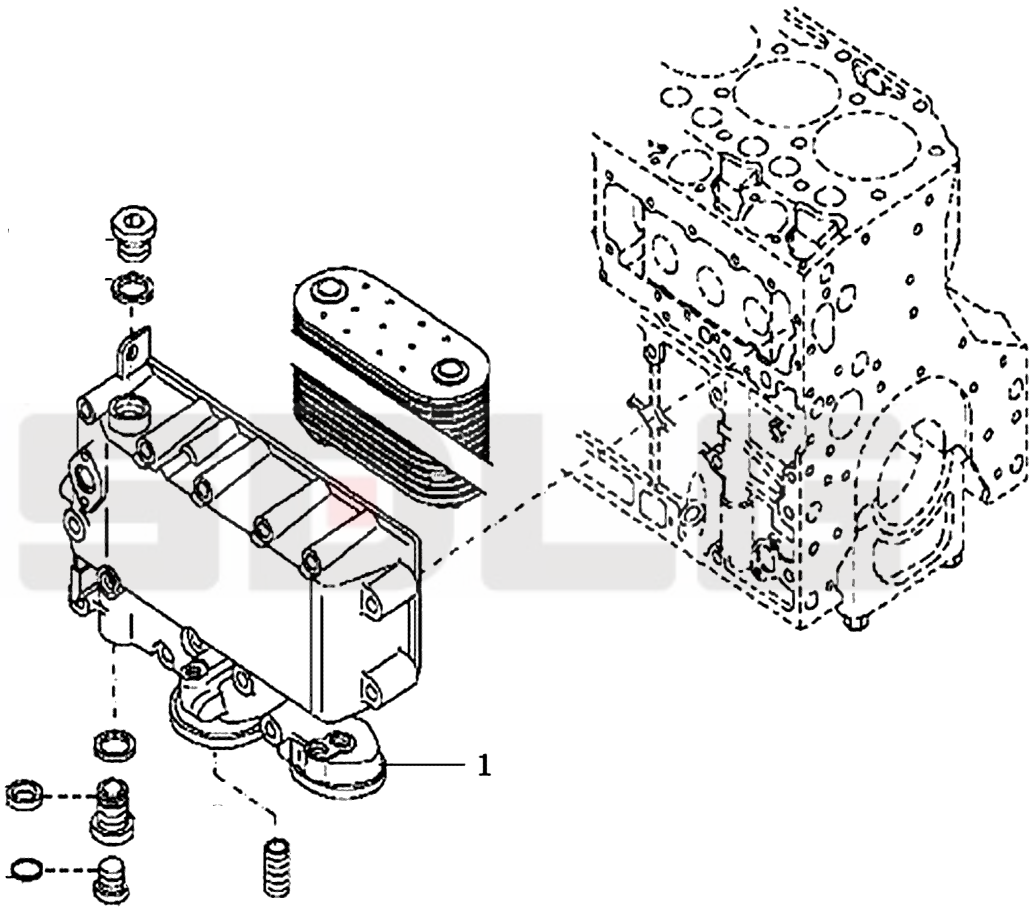

Key	Part No.	Description	Spare parts Y/N	Qty	Remarks
1	4110001900019	Oil cooler	N	1	

SDLG

Oil pressure sensor

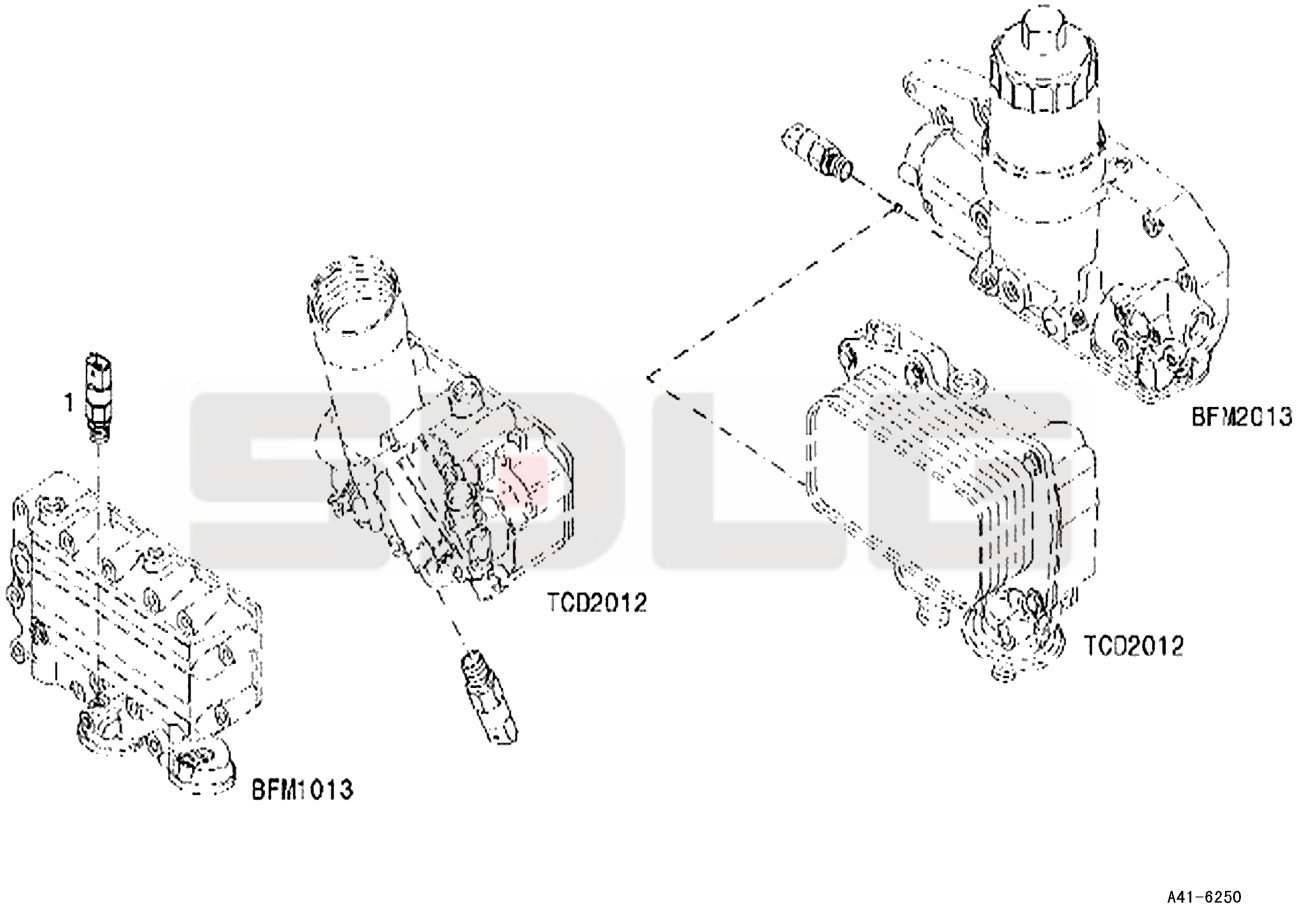

Key	Part No.	Description	Spare parts Y/N	Qty	Remarks
1	4110000727107	Oil pressure sensor	Y	1	

Plug assembly

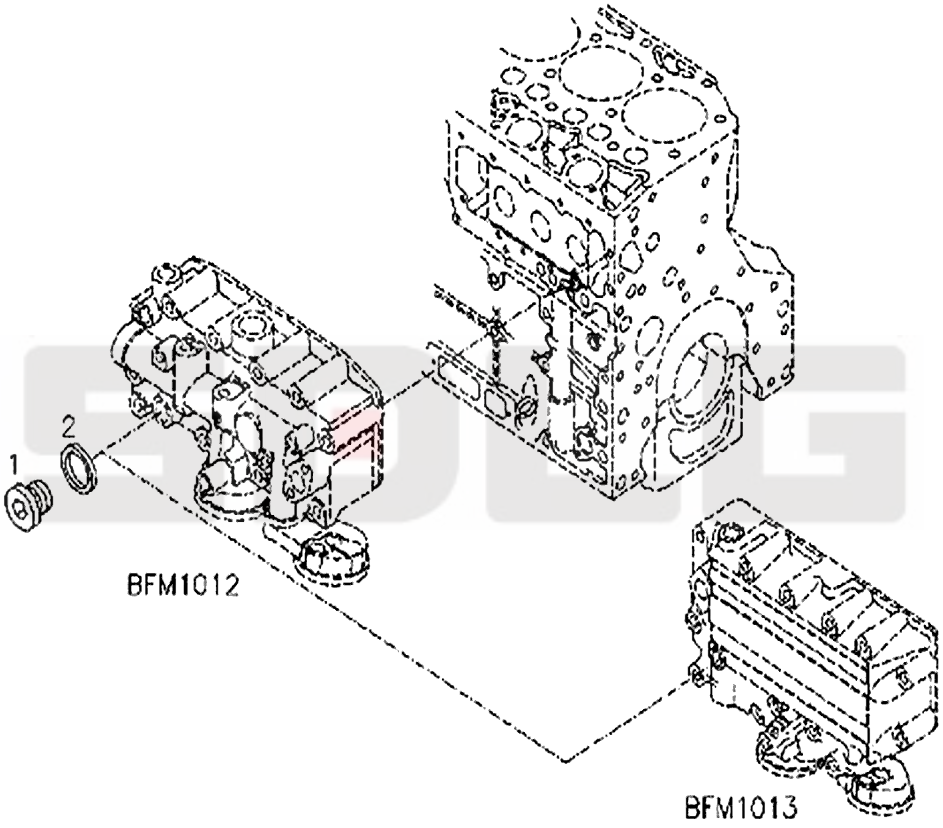

A42-6250

Key	Part No.	Description	Spare parts Y/N	Qty	Remarks
1	4110000509176	Plug	Y	1	
2	4110000509177	Sealing ring	Y	1	

Plug assembly

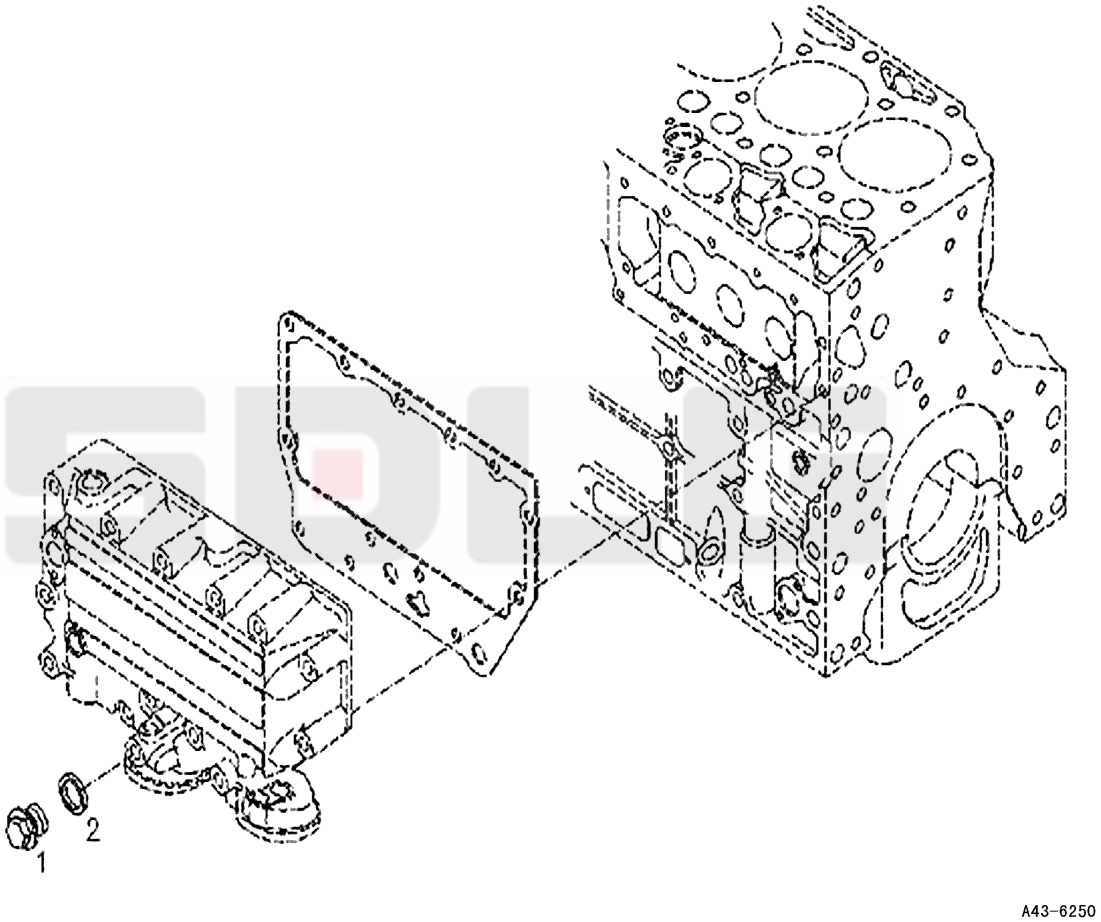

Key	Part No.	Description	Spare parts Y/N	Qty	Remarks
1	4110000970125	Plug	Y	1	
2	4110001007081	Sealing ring	N	1	

Temperature sensor

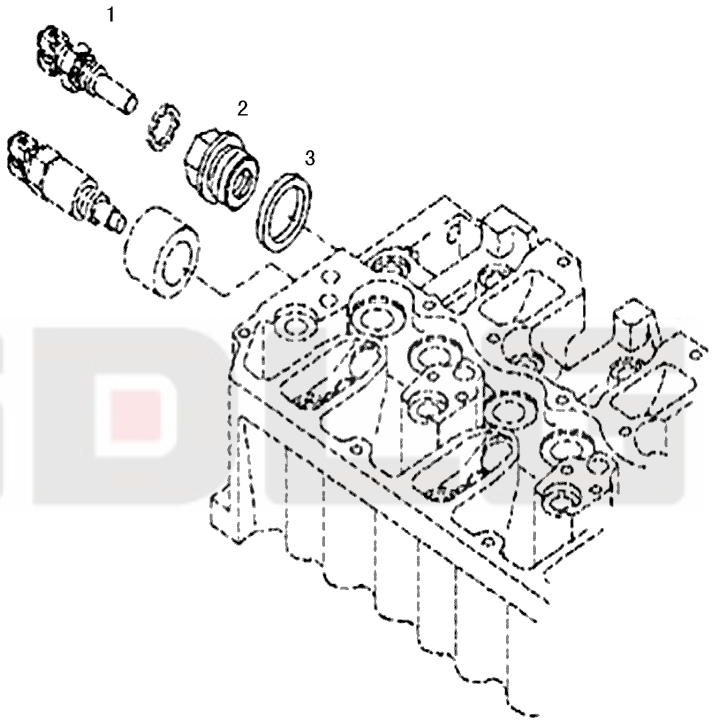

A44-6250

Key	Part No.	Description	Spare parts Y/N	Qty	Remarks
1	4110000727111	Temperature sensor	Y	1	
2	4110000727044	Nipple	Y	1	
3	4110000509307	Sealing ring	Y	1	

Oil return pipe

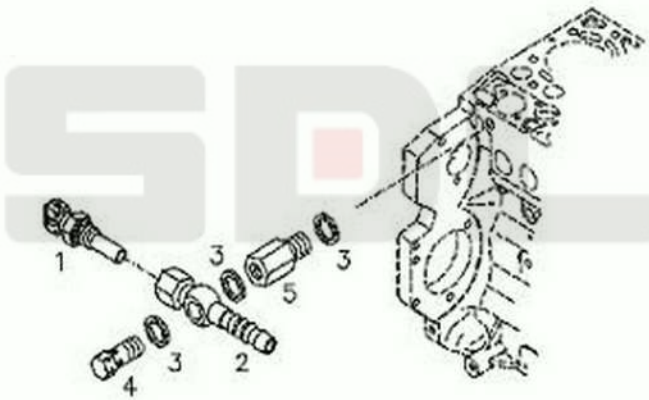

A45-6250

Key	Part No.	Description	Spare parts Y/N	Qty	Remarks
1	4110000727111	Temperature sensor	Y	1	
2	4110000970157	Nipple	Y	1	
3	4110000509230	Sealing ring	Y	3	
4	4110001007016	Valve	N	1	
5	4110000970099	Nipple	Y	1	

SDLG

Protecting plate

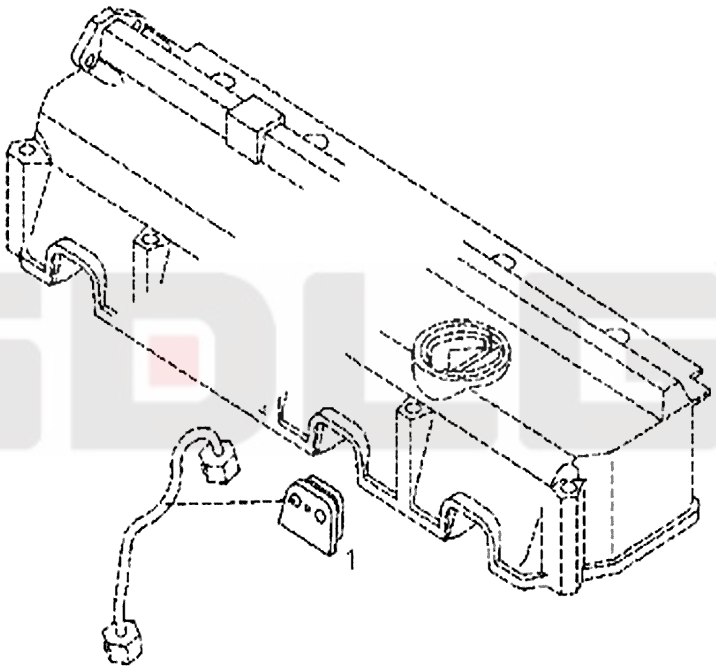

A46-6250

Key	Part No.	Description	Spare parts Y/N	Qty	Remarks
1	4110000509229	Rubber cushion	Y	6	

SDLG

Turbocharger

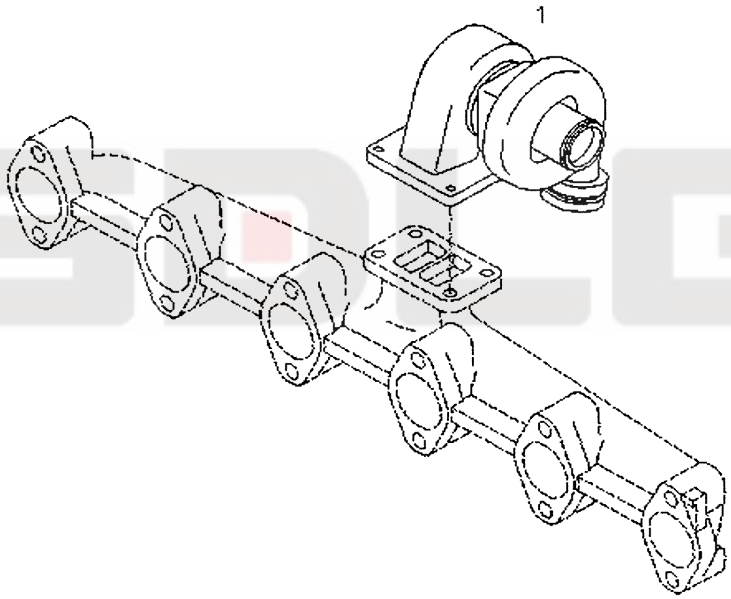

A47-6250

Key	Part No.	Description	Spare parts Y/N	Qty	Remarks
1	4110000970033	Turbocharger	Y	1	

Plug assembly

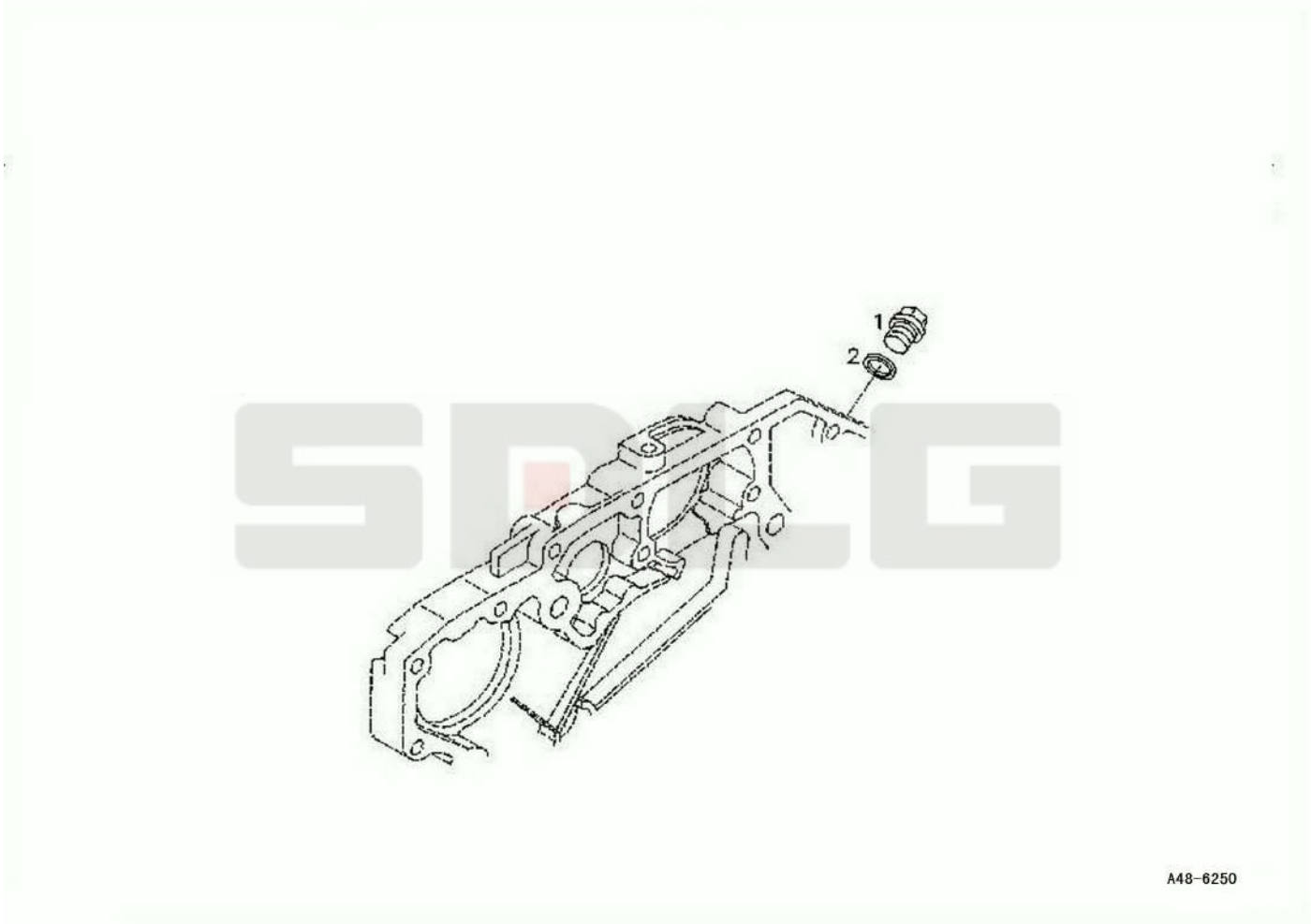

Key	Part No.	Description	Spare parts Y/N	Qty	Remarks
1	4110000509249	Plug	Y	1	
2	4110001424037	Sealing ring	N	1	

Plug assembly

Key	Part No.	Description	Spare parts Y/N	Qty	Remarks
1	4110000509248	Plug	Y	1	

Turbocharger lubricating pipe

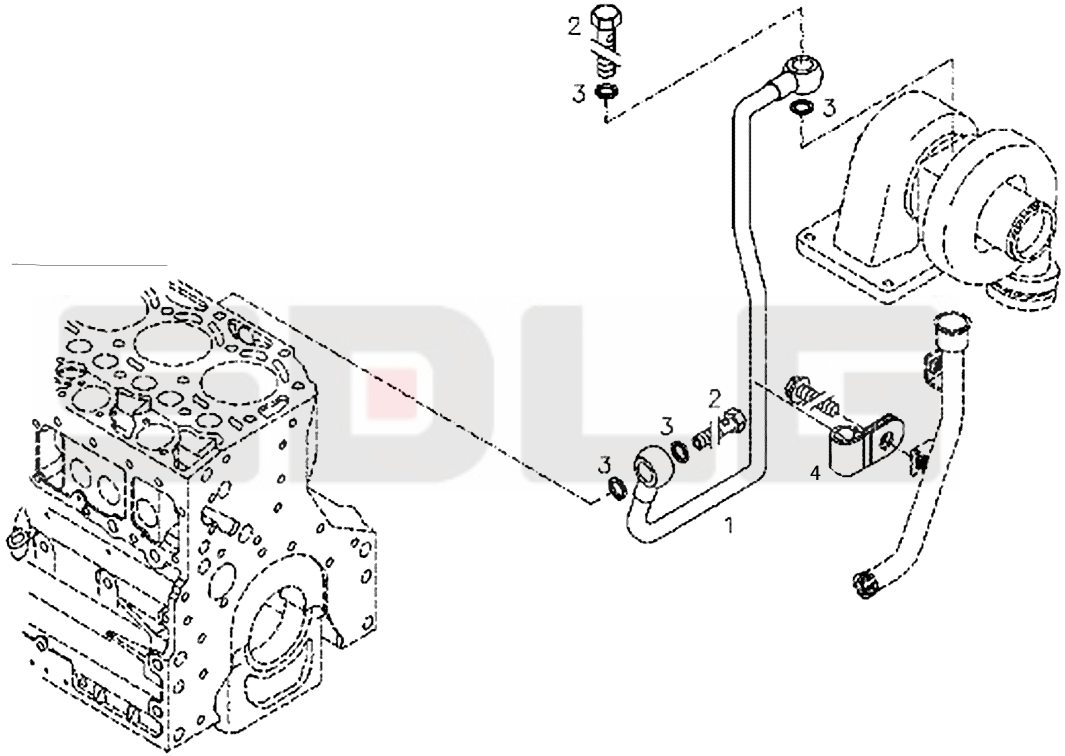

A50-6250

Key	Part No.	Description	Spare parts Y/N	Qty	Remarks
1	4110000970156	Oil pipe	Y	1	
2	4110000509241	Hollow screw	Y	2	
3	4110000509230	Sealing ring	Y	4	
4	4110000727033	Clamp	Y	1	

Turbocharger lubricating pipe

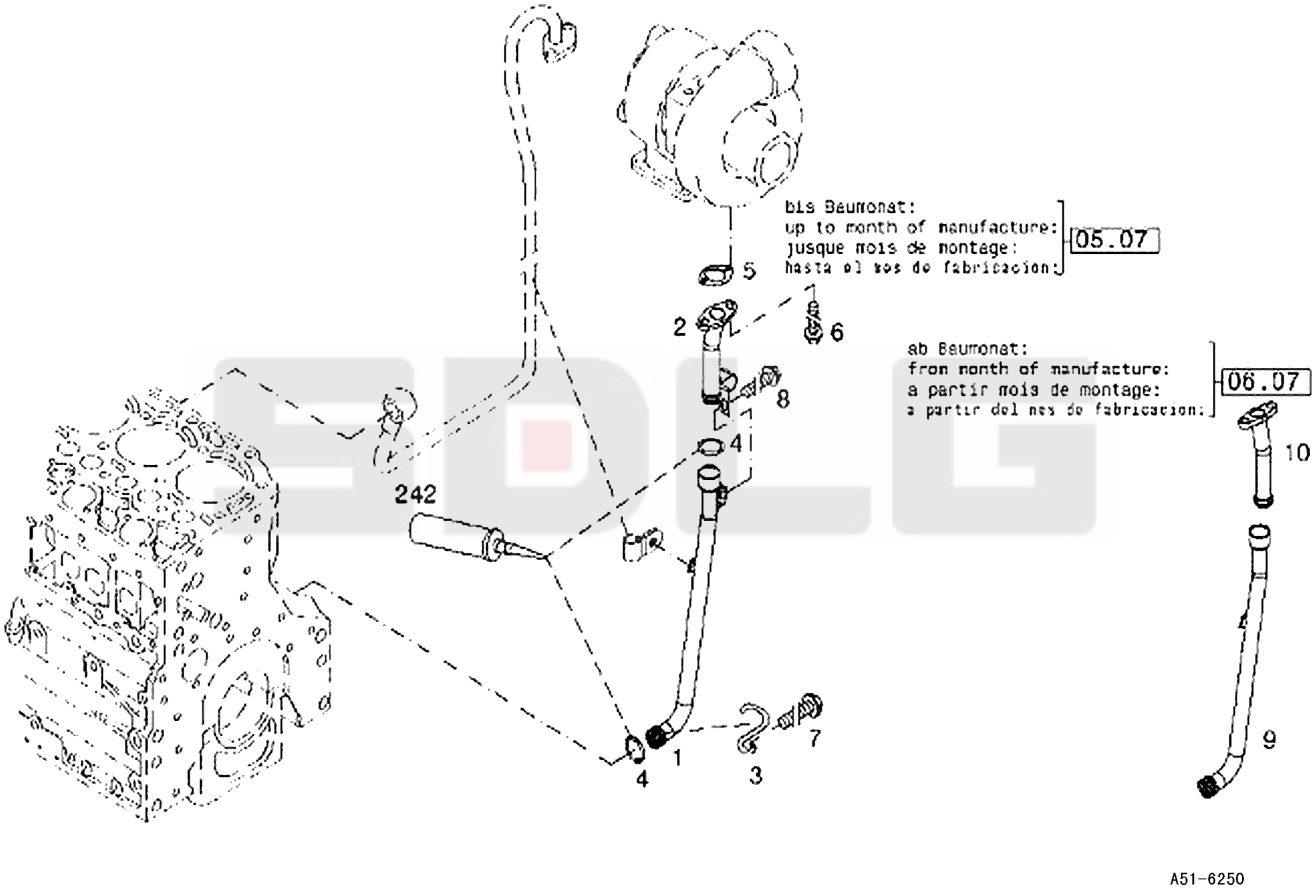

Key	Part No.	Description	Spare parts Y/N	Qty	Remarks
1	4110000970036	Oil hose	Y	1	
2	4110000970037	Oil hose	Y	1	
3	4110000509247	Retainer	Y	1	
4	4110000727034	O-ring	Y	2	
5	4110000509243	Gasket	Y	1	
6	4110000509173	Screw	Y	2	
7	4110000509246	Screw	Y	1	

Installation kit

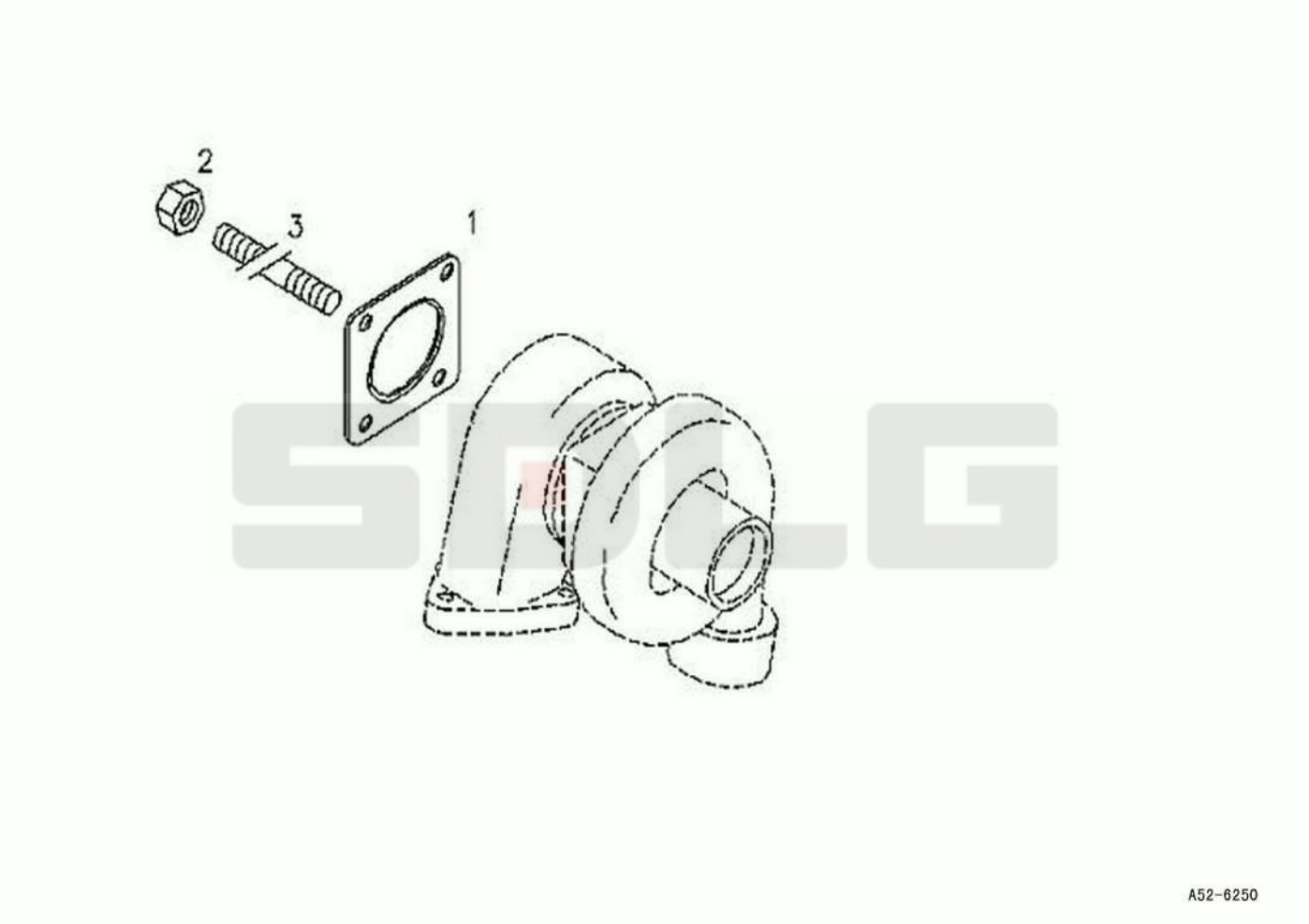

Key	Part No.	Description	Spare parts Y/N	Qty	Remarks
1	4110000727031	Washer	N	1	
2	4110000509239	Hexagon nut	Y	4	
3	4110000727066	Stud	Y	4	

Exhaust manifold

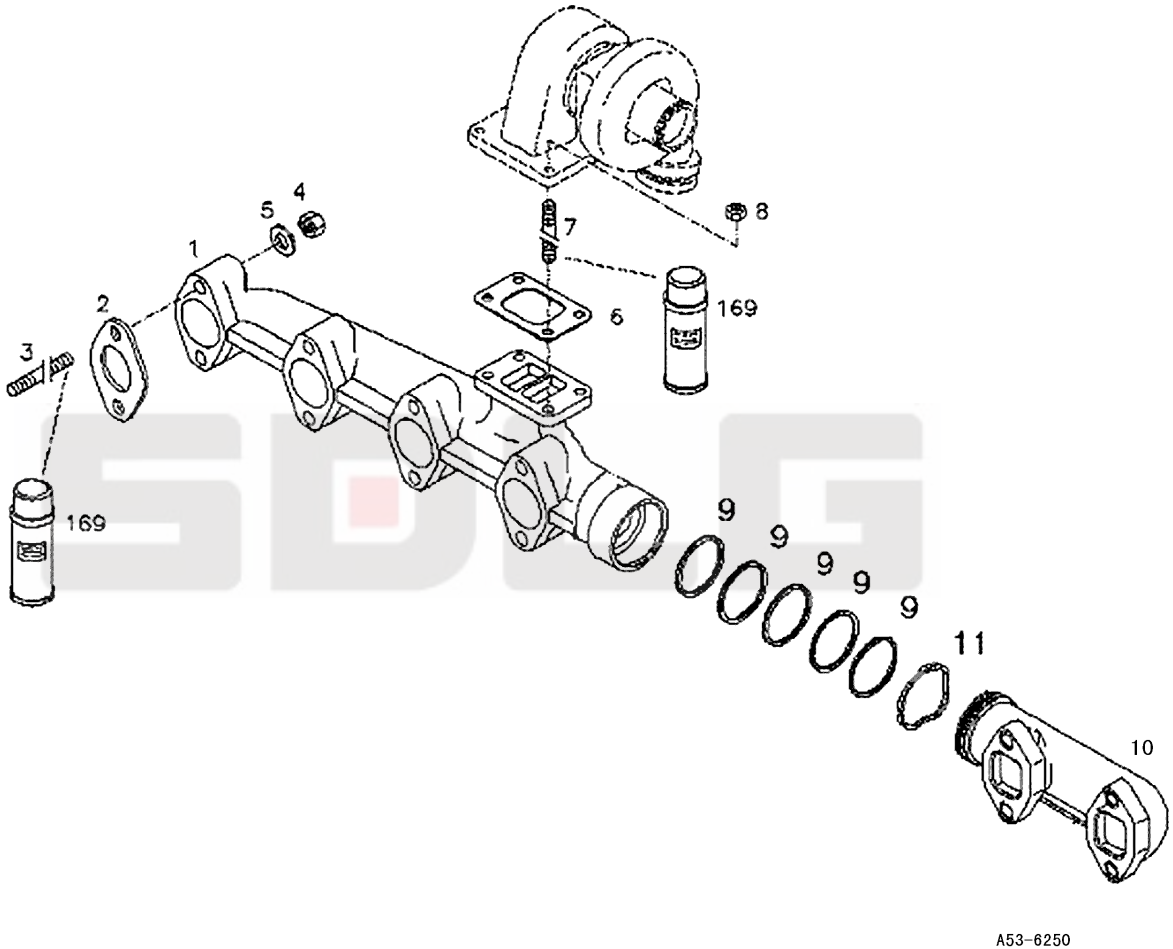

Key	Part No.	Description	Spare parts Y/N	Qty	Remarks
1	4110000970085	Exhaust manifold	Y	1	
2	4110000727008	Gasket	Y	6	
3	4110000727100	Stud	N	12	
4	4110000509140	Nut	Y	12	
5	4110000509139	Washer	Y	12	
6	4110000509237	Gasket	Y	1	
7	4110000727066	Stud	Y	4	
8	4110000509239	Hexagon nut	Y	4	
9	4110000970145	Sealing ring	Y	5	
10	4110000970086	Exhaust manifold	Y	1	
11	4110000509133	Spring ring	Y	1	

Cover plate

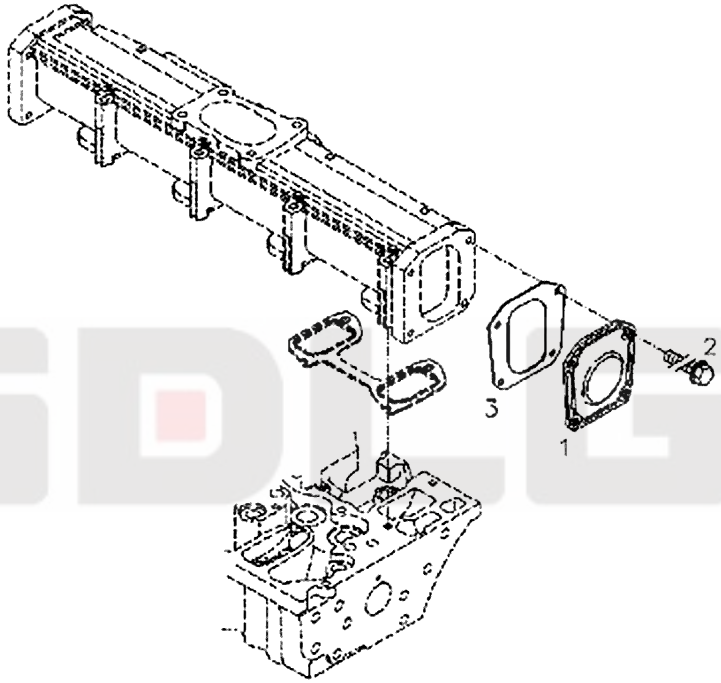

A54-6250

Key	Part No.	Description	Spare parts Y/N	Qty	Remarks
1	4110000970084	Cover plate	Y	1	
2	4110000509246	Screw	Y	4	
3	4110000970083	Gasket	Y	1	

Inlet manifold

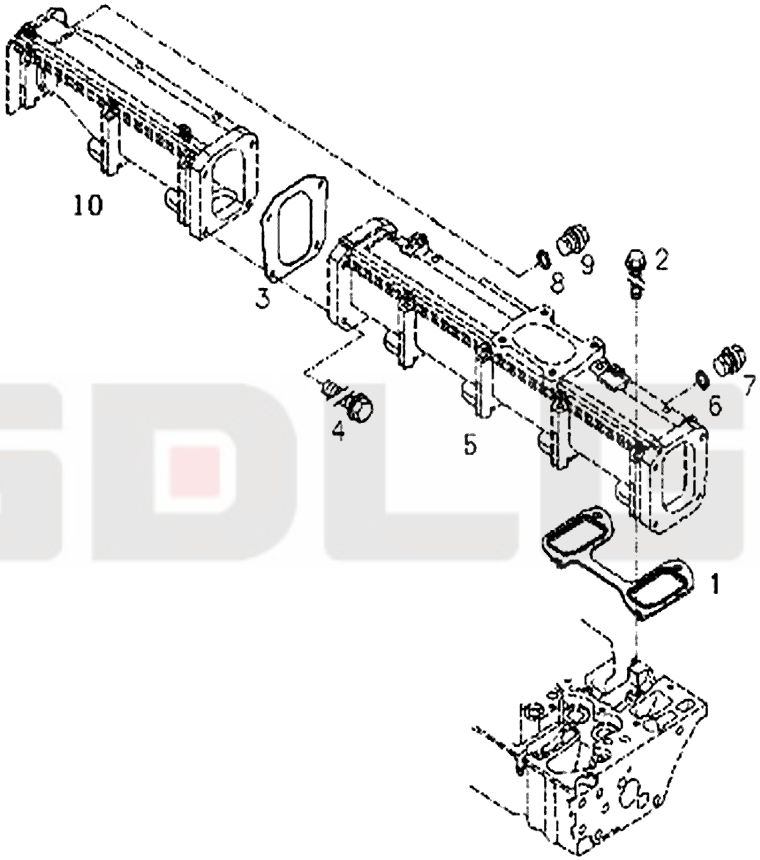

A55-6250

Key	Part No.	Description	Spare parts Y/N	Qty	Remarks
1	4110000970080	Gasket	Y	1	
2	4110000970053	Screw	Y	12	
3	4110000970083	Gasket	Y	1	
4	4110000727011	Screw	Y	4	
5	4110000970081	Inlet manifold	Y	1	
6	4110000509230	Sealing ring	Y	1	
7	4110000509020	Plug	Y	1	
8	4110001007081	Sealing ring	N	1	
9	4110001167194	Plug	N	1	
10	4110000970082	Inlet manifold	Y	1	

Pre-heater

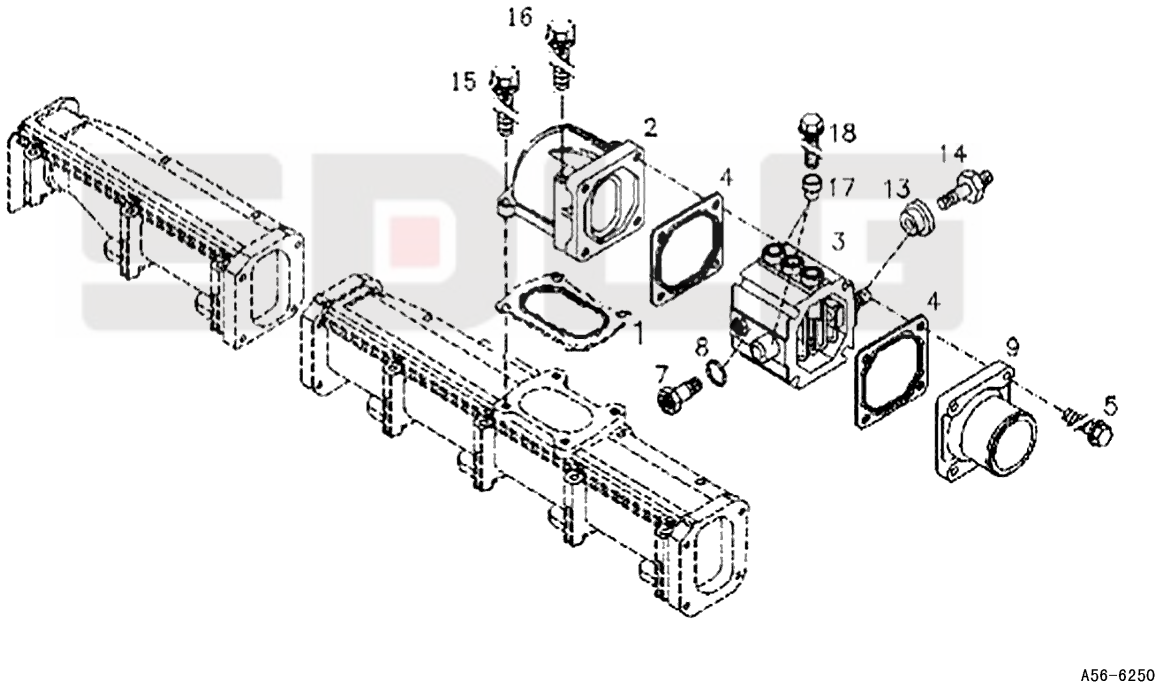

Key	Part No.	Description	Spare parts Y/N	Qty	Remarks
1	4110000970012	Gasket	Y	1	
2	4110000970170	Intermediate pipe	Y	1	
3	4110000727265	Pre-heater	N	1	
4	4110000727266	Gasket	Y	2	
5	4110000509319	Bolt	Y	4	
6	kongbai	Kongbai	N	1	
7	kongbai	Kongbai	N	1	
8	kongbai	Kongbai	N	1	
9	4110000970172	Intermediate pipe	Y	1	
10	kongbai	Kongbai	N	1	
11	kongbai	Kongbai	N	1	
12	kongbai	Kongbai	N	1	
13	kongbai	Kongbai	N	1	
14	kongbai	Kongbai	N	1	
15	4110000970087	Screw	Y	2	
16	4110000970175	Screw	Y	2	

Plug assembly

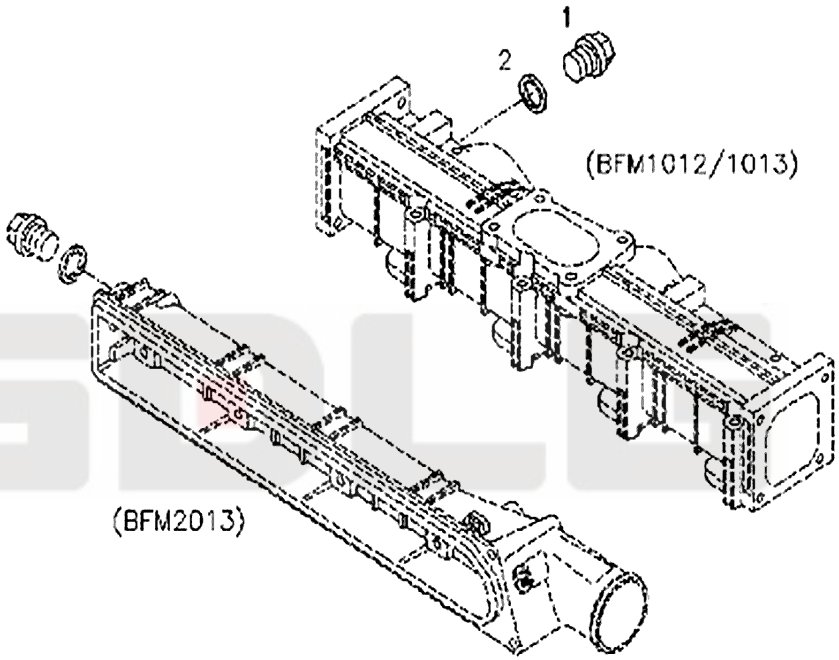

A57-6250

Key	Part No.	Description	Spare parts Y/N	Qty	Remarks
1	4110000727032	Plug	Y	1	
2	4110000509191	Sealing ring	Y	1	

Installation kit

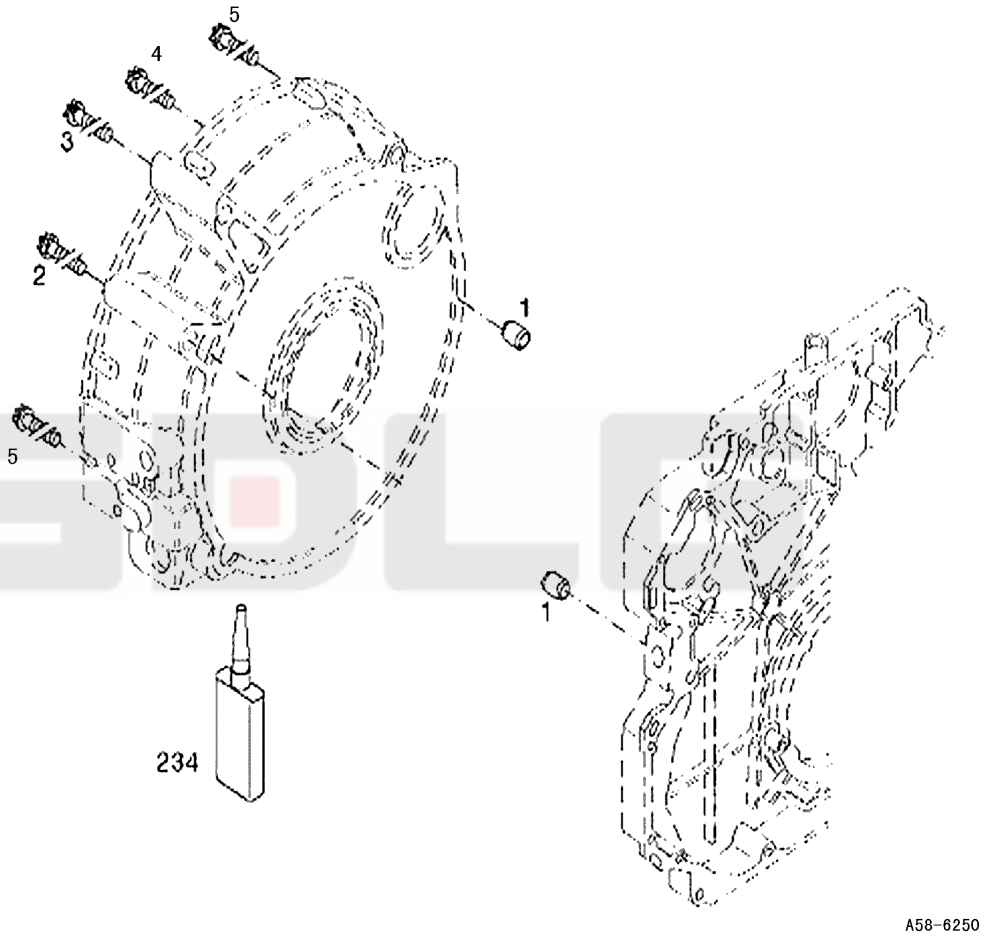

Key	Part No.	Description	Spare parts Y/N	Qty	Remarks
1	4110000727077	Spring pin	Y	2	
2	4110000970041	Screw	Y	1	
3	4110000970042	Screw	Y	2	
4	4110000970043	Screw	Y	1	
5	4110000970044	Screw	Y	2	

Flywheel housing assembly

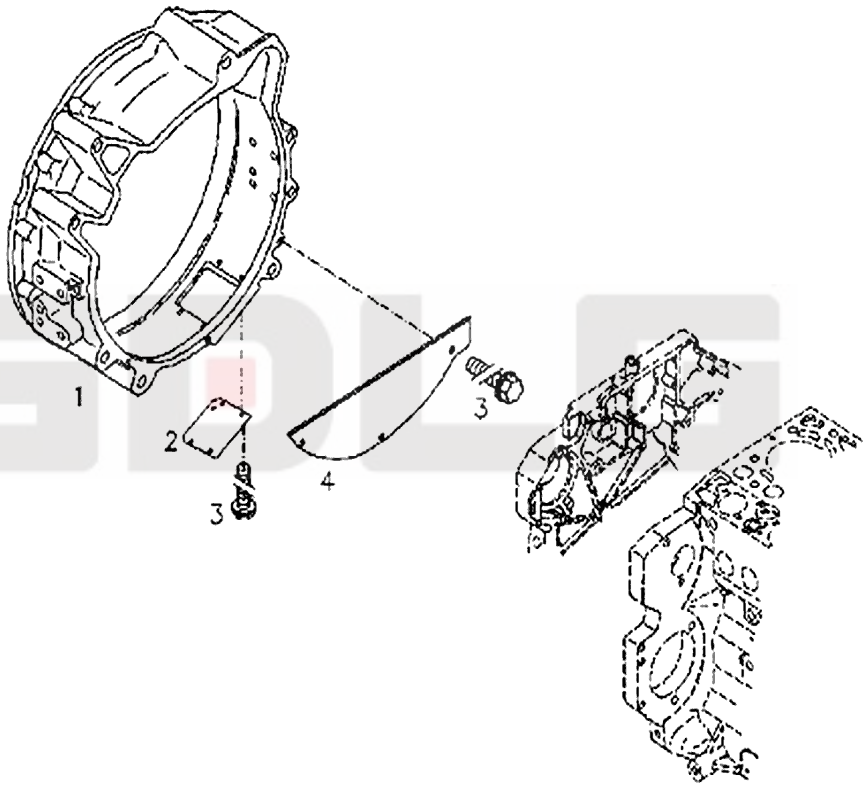

A59-6250

Key	Part No.	Description	Spare parts Y/N	Qty	Remarks
1	4110000970173	Flywheel housing	Y	1	
2	4110000509033	Cover	Y	1	
3	4110000509035	Bolt	Y	7	
4	4110000509036	Cover	Y	1	

Installation kit

Key	Part No.	Description	Spare parts Y/N	Qty	Remarks
1	4110000970120	Alternator bracket	Y	1	
2	4110000970174	Bracket	Y	1	
3	4110000970129	Screw	Y	4	
4	4110000509175	Screw	Y	1	
5	4110000727035	Screw	Y	1	
6	4110000509208	Screw	Y	1	
7	4110000509209	Plain washer	Y	1	

Alternator

Key	Part No.	Description	Spare parts Y/N	Qty	Remarks
1	4110000970184	Alternator	Y	1	

Pulley assembly

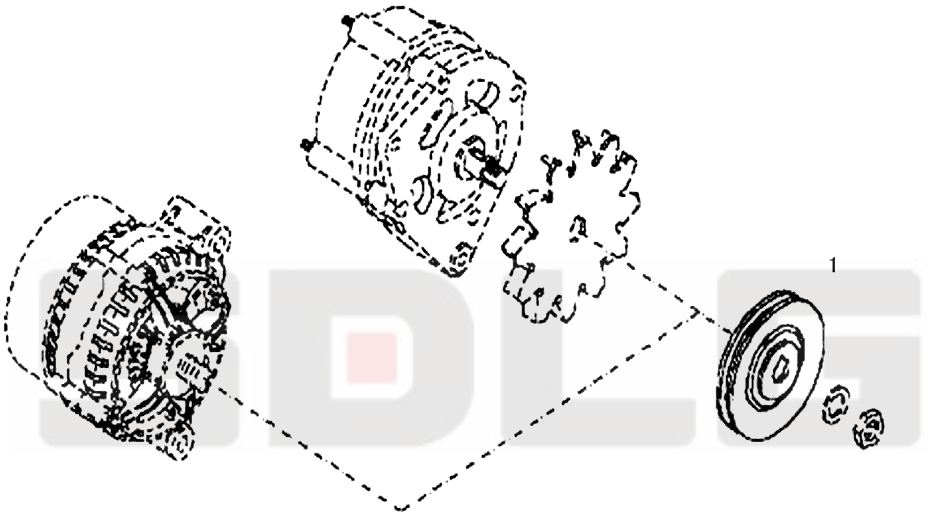

A62-6250

Key	Part No.	Description	Spare parts Y/N	Qty	Remarks
1	4110000970144	Pulley	Y	1	

SDLG

V-belt

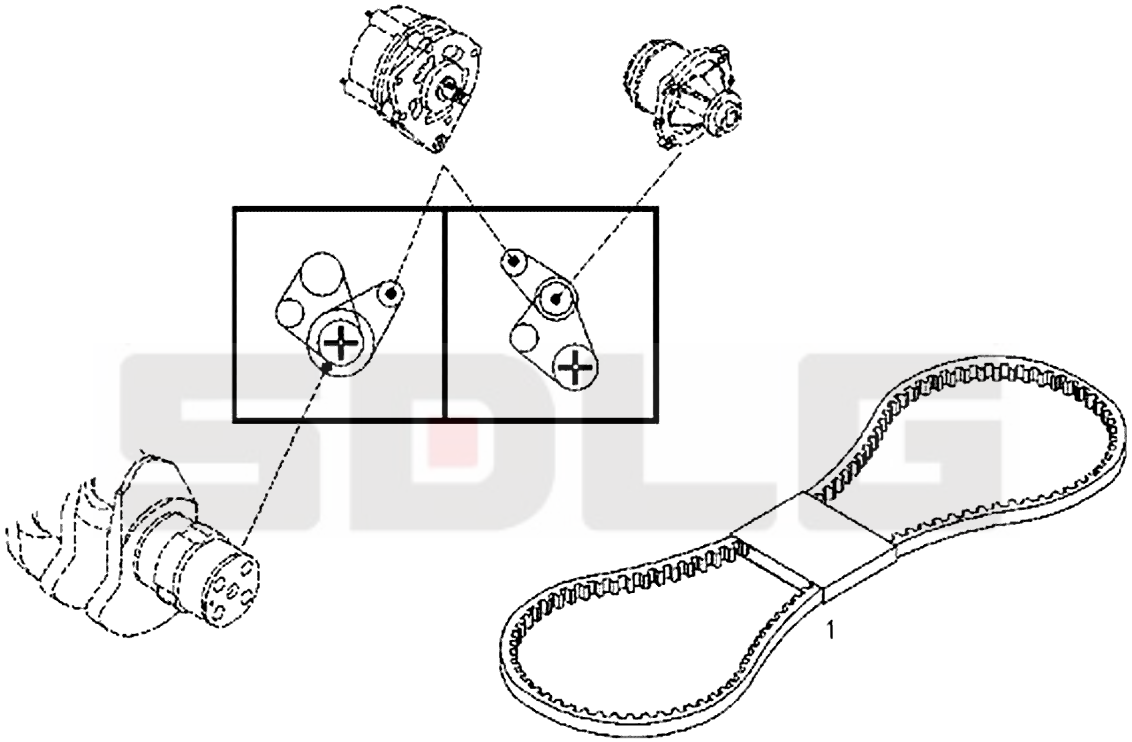

A63-6250

Key	Part No.	Description	Spare parts Y/N	Qty	Remarks
1	4110000970022	V-belt	Y	1	

Fan housing

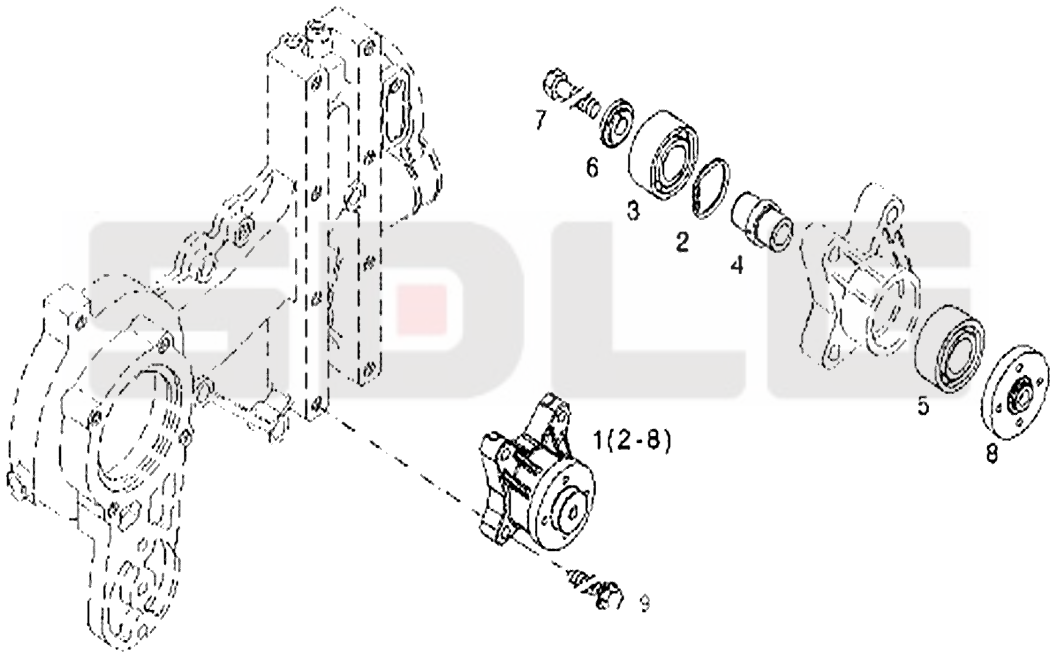

A64-6250

Key	Part No.	Description	Spare parts Y/N	Qty	Remarks
1	4110000970192	Bracket	Y	1	
2	kongbai	Kongbai	N	1	
3	kongbai	Kongbai	N	1	
4	kongbai	Kongbai	N	1	
5	kongbai	Kongbai	N	1	
6	kongbai	Kongbai	N	1	
7	kongbai	Kongbai	N	1	
8	kongbai	Kongbai	N	1	
9	4110000509315	Screw	Y	4	

Installation kit

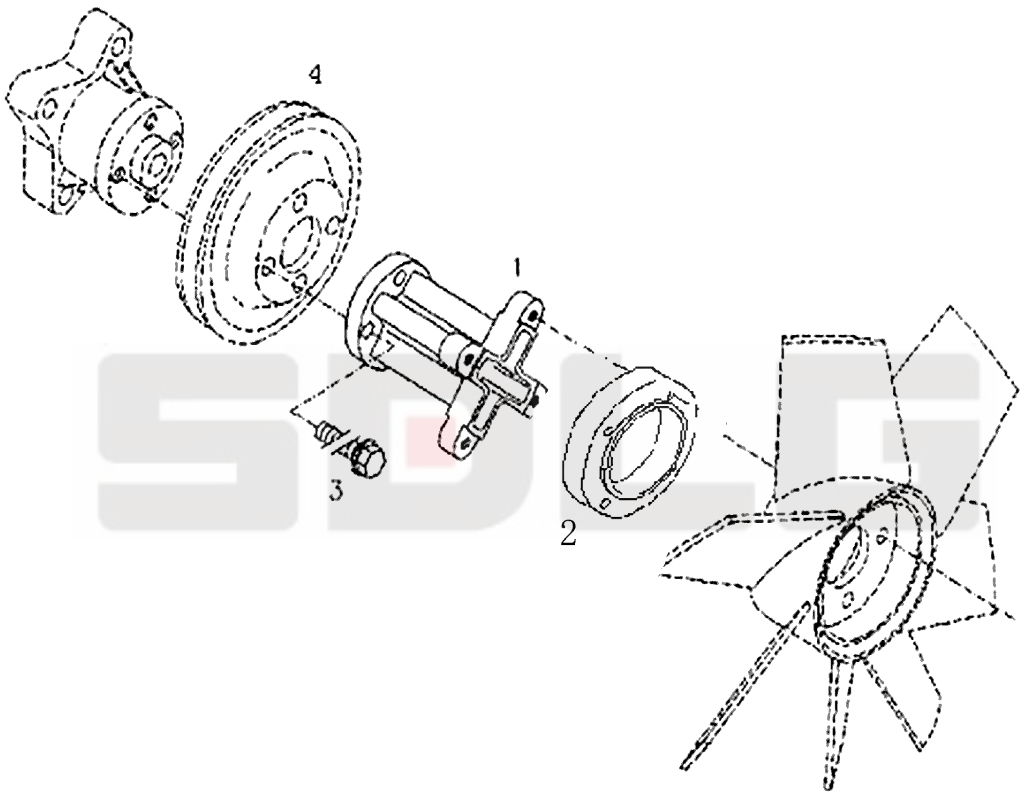

A65-6250

Key	Part No.	Description	Spare parts Y/N	Qty	Remarks
1	4110000727247	Adapter	Y	1	
2	4110000727199	Spacer	Y	1	
3	4110000509127	Bolt	Y	8	
4	4110000970201	Pulley	Y	1	

Water pump assembly

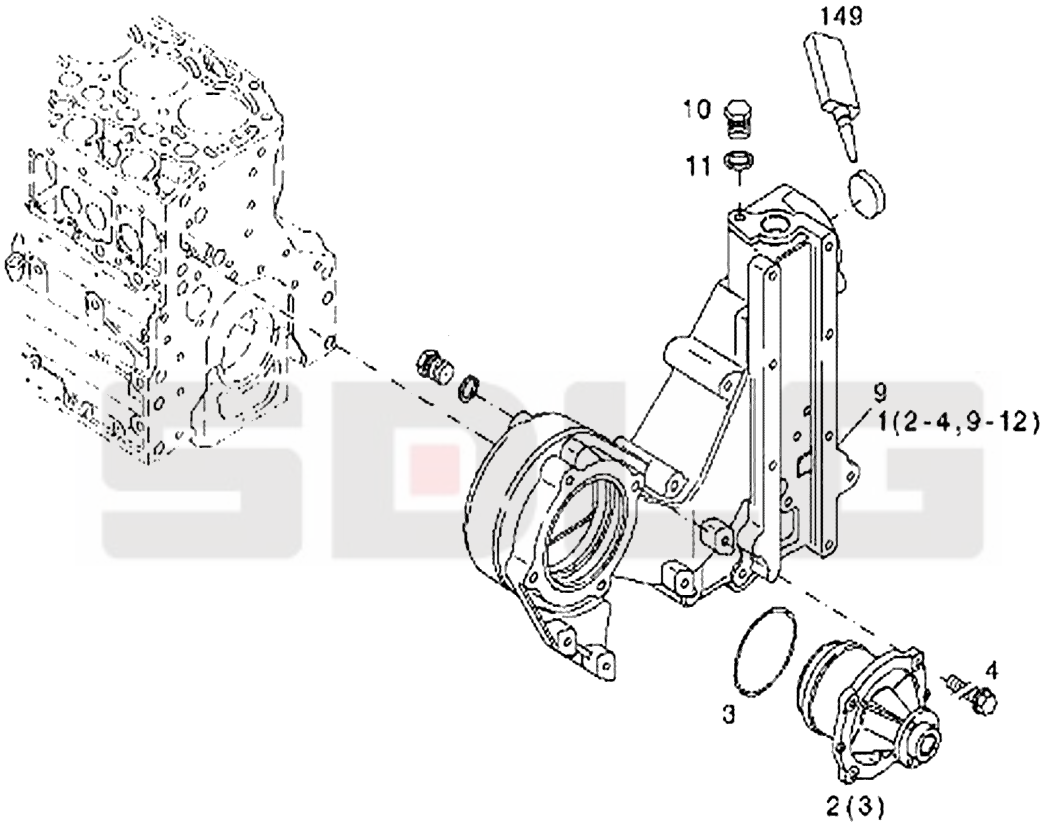

A66-6250

Key	Part No.	Description	Spare parts Y/N	Qty	Remarks
1	4110000970021	Bracket	Y	1	
2	4110000970109	Water pump	N	1	
3	4110000970112	O-ring	Y	1	
4	4110000970114	Screw	N	4	
5	kongbai	Kongbai	N	1	
6	kongbai	Kongbai	N	1	
7	kongbai	Kongbai	N	1	
8	kongbai	Kongbai	N	1	
9	4110000970111	Bracket	N	1	

Joint

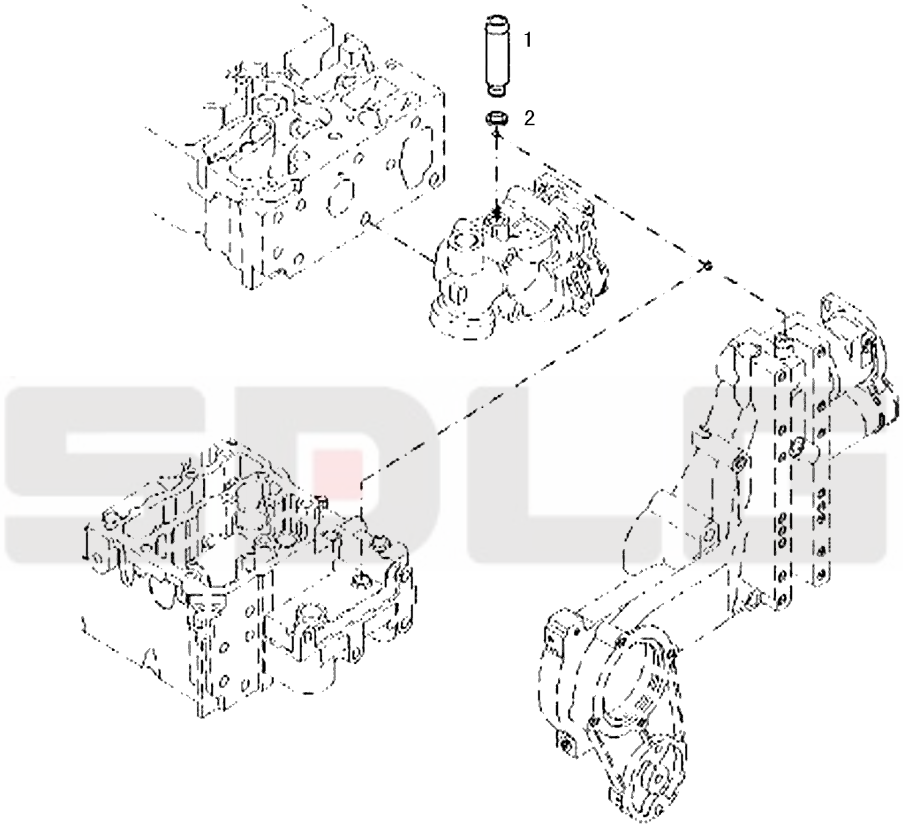

A67-6250

Key	Part No.	Description	Spare parts Y/N	Qty	Remarks
1	4110000970179	Plug	Y	1	
2	4110000509256	Sealing ring	Y	1	

Installation kit

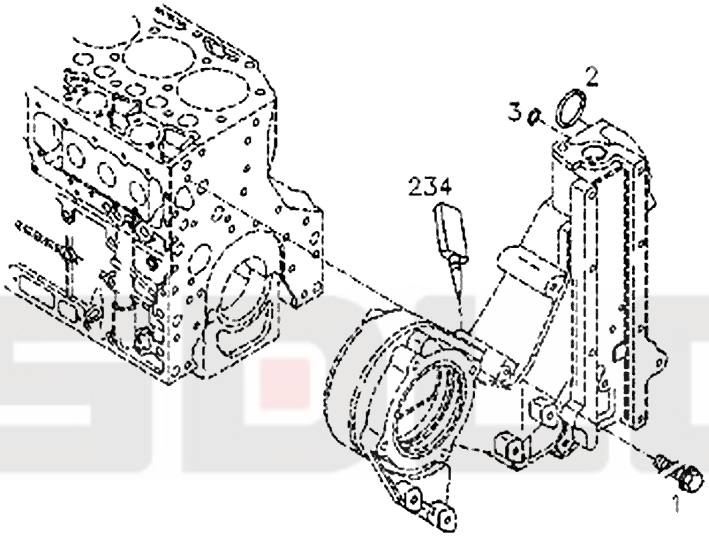

A68-6250

Key	Part No.	Description	Spare parts Y/N	Qty	Remarks
1	4110000727035	Screw	Y	7	
2	4110000970115	O-ring	Y	1	
3	4110000970116	O-ring	Y	1	

Fuel pump assembly

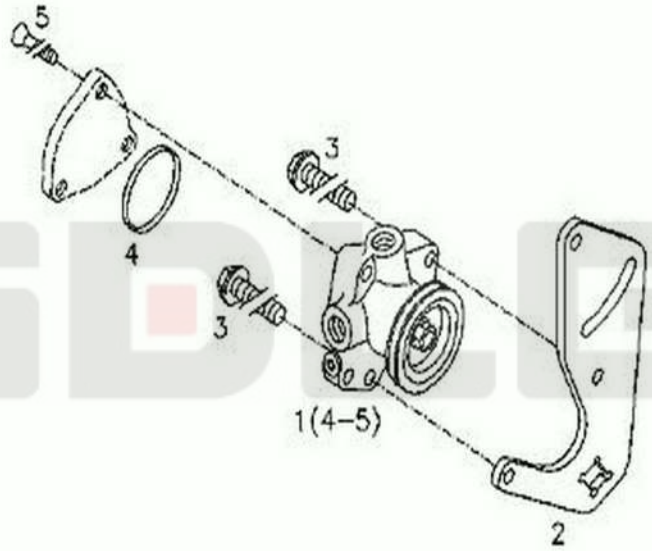

Key	Part No.	Description	Spare parts Y/N	Qty	Remarks
1	4110000970100	Fuel pump	Y	1	
2	4110000970166	Connecting plate	Y	1	
3	4110000509208	Screw	Y	2	

Plug assembly

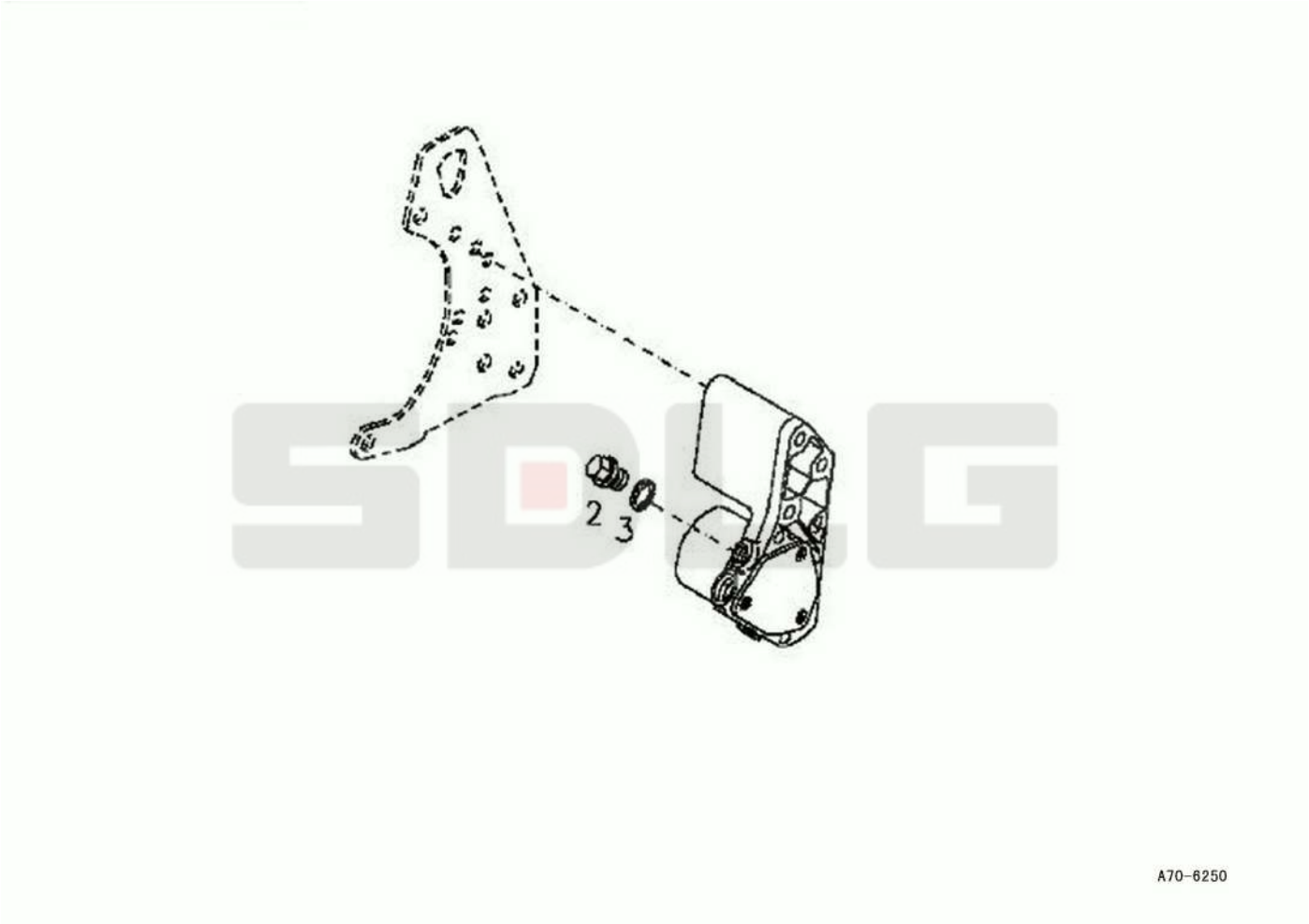

Key	Part No.	Description	Spare parts Y/N	Qty	Remarks
1	4110000970122	Plug	Y	1	
2	4110000970140	Sealing ring	Y	1	

Drive unit

Key	Part No.	Description	Spare parts Y/N	Qty	Remarks
1	4110000970035	Pulley	Y	1	
2	4110000509246	Screw	Y	3	

Installation kit

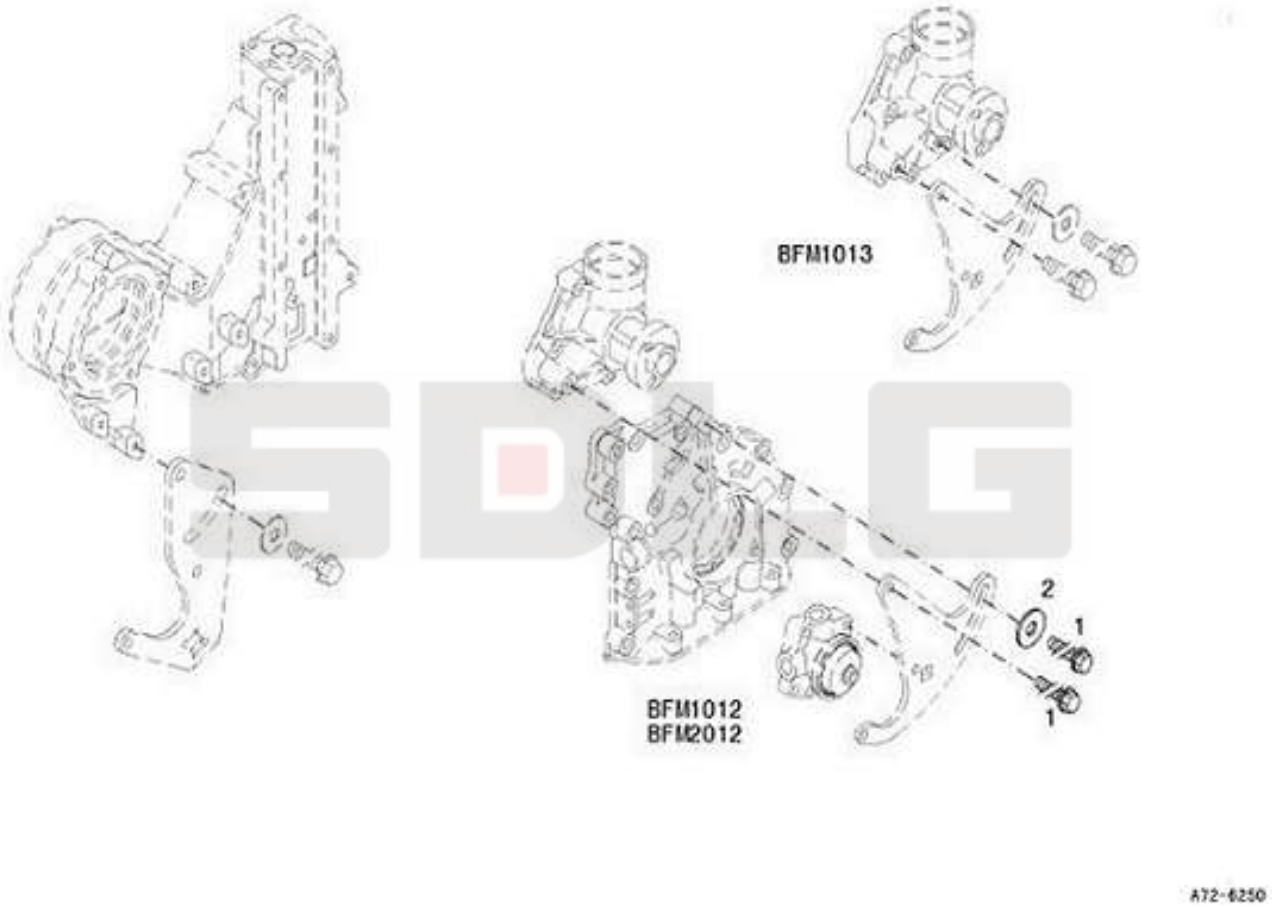

Key	Part No.	Description	Spare parts Y/N	Qty	Remarks
1	4110000970128	Screw	N	2	
2	4110000509209	Plain washer	Y	1	

Fuel filter

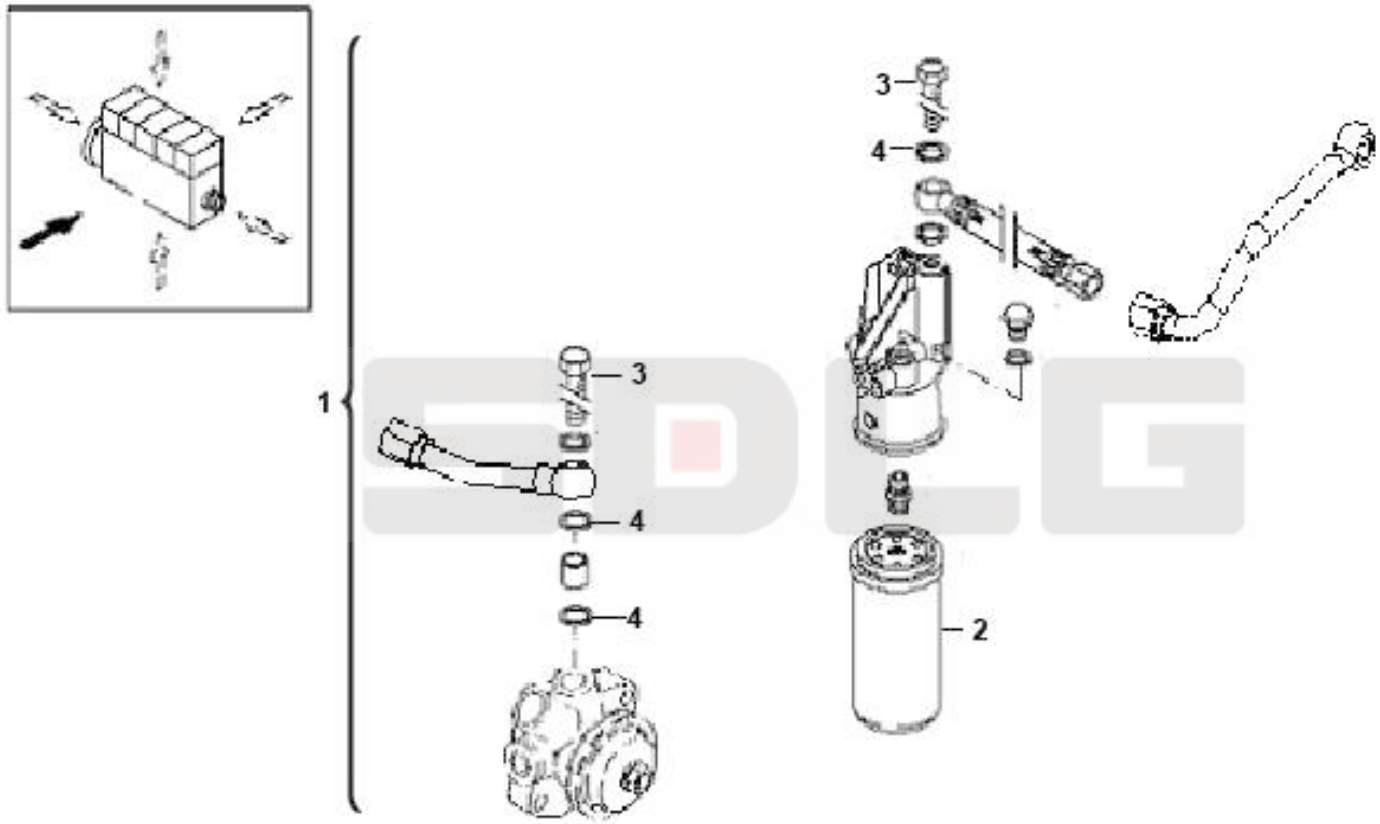

Key	Part No.	Description	Spare parts Y/N	Qty	Remarks
1	4110000970034	Fuel filter	Y	1	
2	4110000727162	Fuel filter insert	Y	1	
3	4110000988008	Hollow screw	Y	3	
4	4110000988017	Sealing ring	Y	5	

Fuel pipe assembly

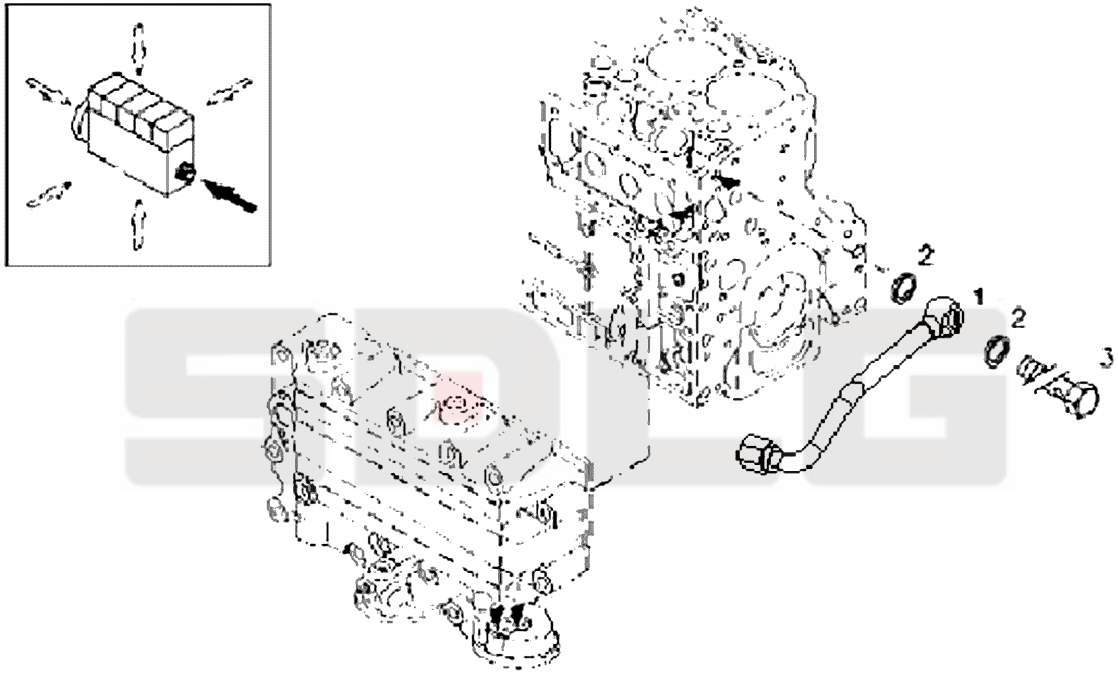

Key	Part No.	Description	Spare parts Y/N	Qty	Remarks
1	4110000970177	Belt	Y	1	
2	4110000988017	Sealing ring	Y	2	
3	4110000509213	Hollow screw	Y	1	

Installation kit

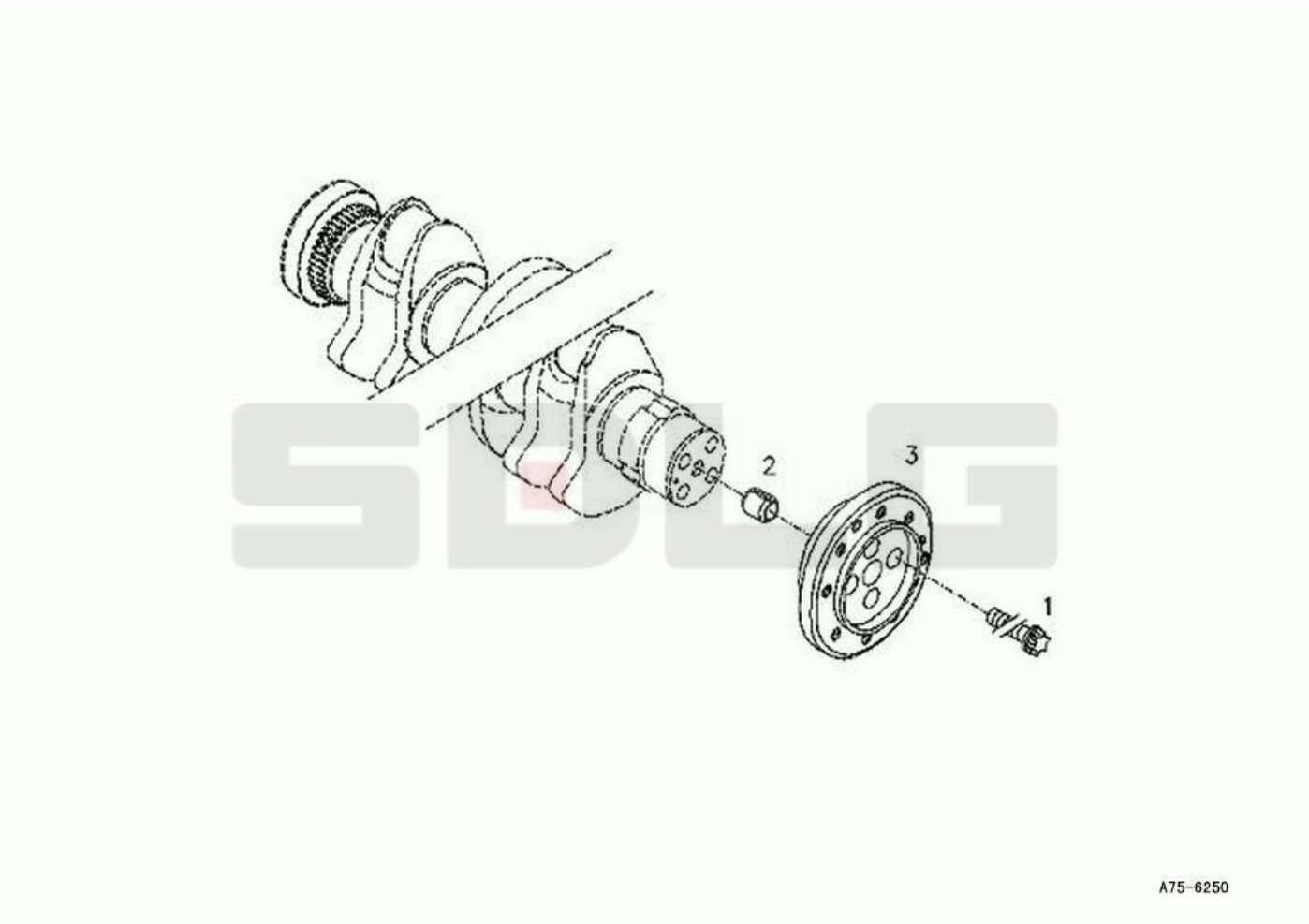

Key	Part No.	Description	Spare parts Y/N	Qty	Remarks
1	4110000509080	Screw	Y	4	
2	4110000727078	Spring pin	Y	1	
3	4110000970057	Flange	Y	1	

Belt tensioner

Key	Part No.	Description	Spare parts Y/N	Qty	Remarks
1	4110000970097	Tension pulley	Y	1	

Installation kit

Key	Part No.	Description	Spare parts Y/N	Qty	Remarks
1	4110000509052	Bolt	Y	1	
2	4110000970098	Plain washer	Y	1	
3	4110000970176	Screw	N	1	

Absorber

Key	Part No.	Description	Spare parts Y/N	Qty	Remarks
1	4110000970153	Absorber	Y	1	

Pulley assembly

Key	Part No.	Description	Spare parts Y/N	Qty	Remarks
1	4110000970058	Pulley	Y	1	
2	4110000970131	Screw	N	9	

V-belt

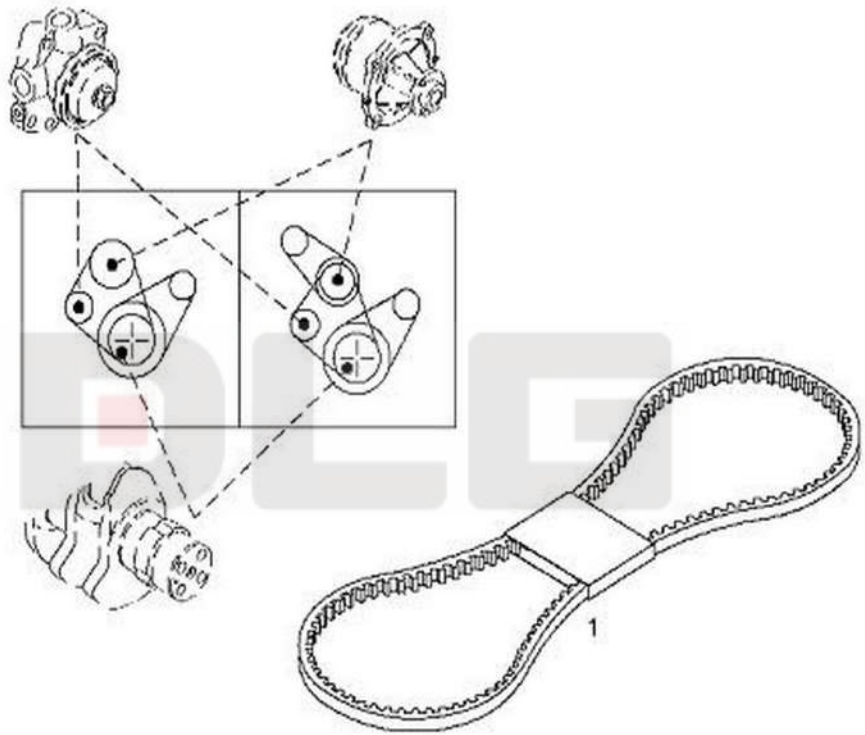

A80-6250

Key	Part No.	Description	Spare parts Y/N	Qty	Remarks
1	4110000970023	V-belt	Y	1	

SDLG

V-belt

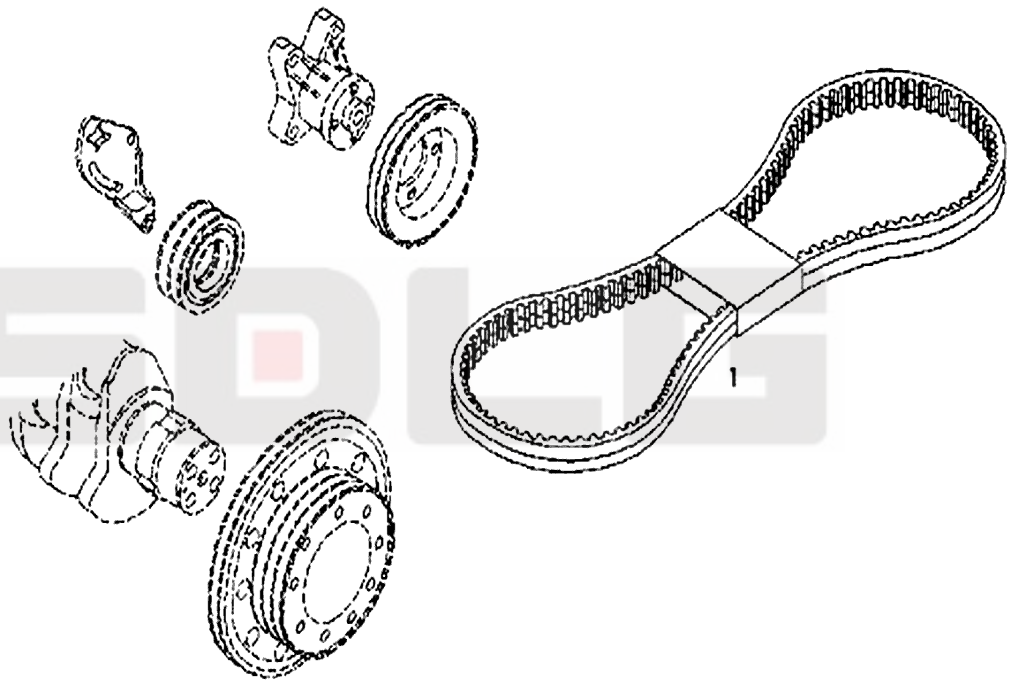

A81-6250

Key	Part No.	Description	Spare parts Y/N	Qty	Remarks
1	4110000970202	V-belt	Y	1	

SDLG

Plug assembly

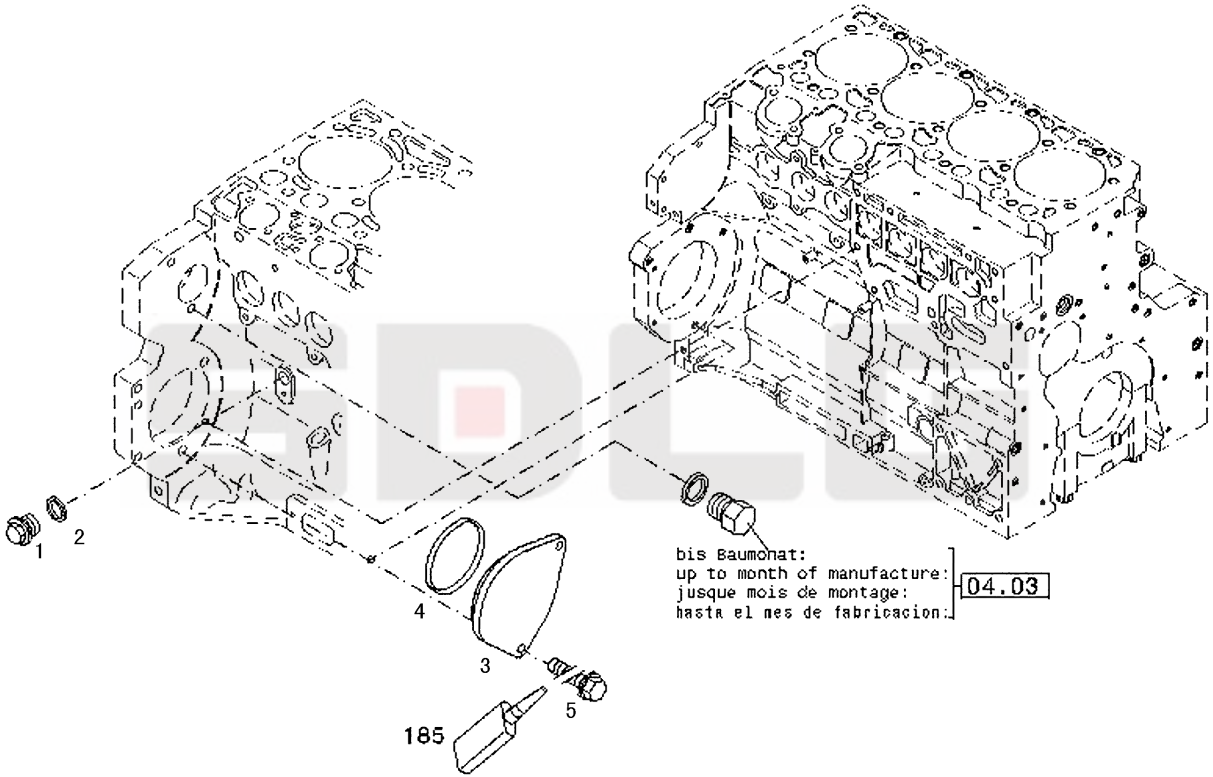

A82-6250

Key	Part No.	Description	Spare parts Y/N	Qty	Remarks
1	4110000509018	Plug	Y	1	
2	4110000509230	Sealing ring	Y	1	
3	4110000727124	Cover	Y	1	
4	4110000727040	O-ring	Y	1	
5	4110000509086	Screw	Y	2	

Plug assembly

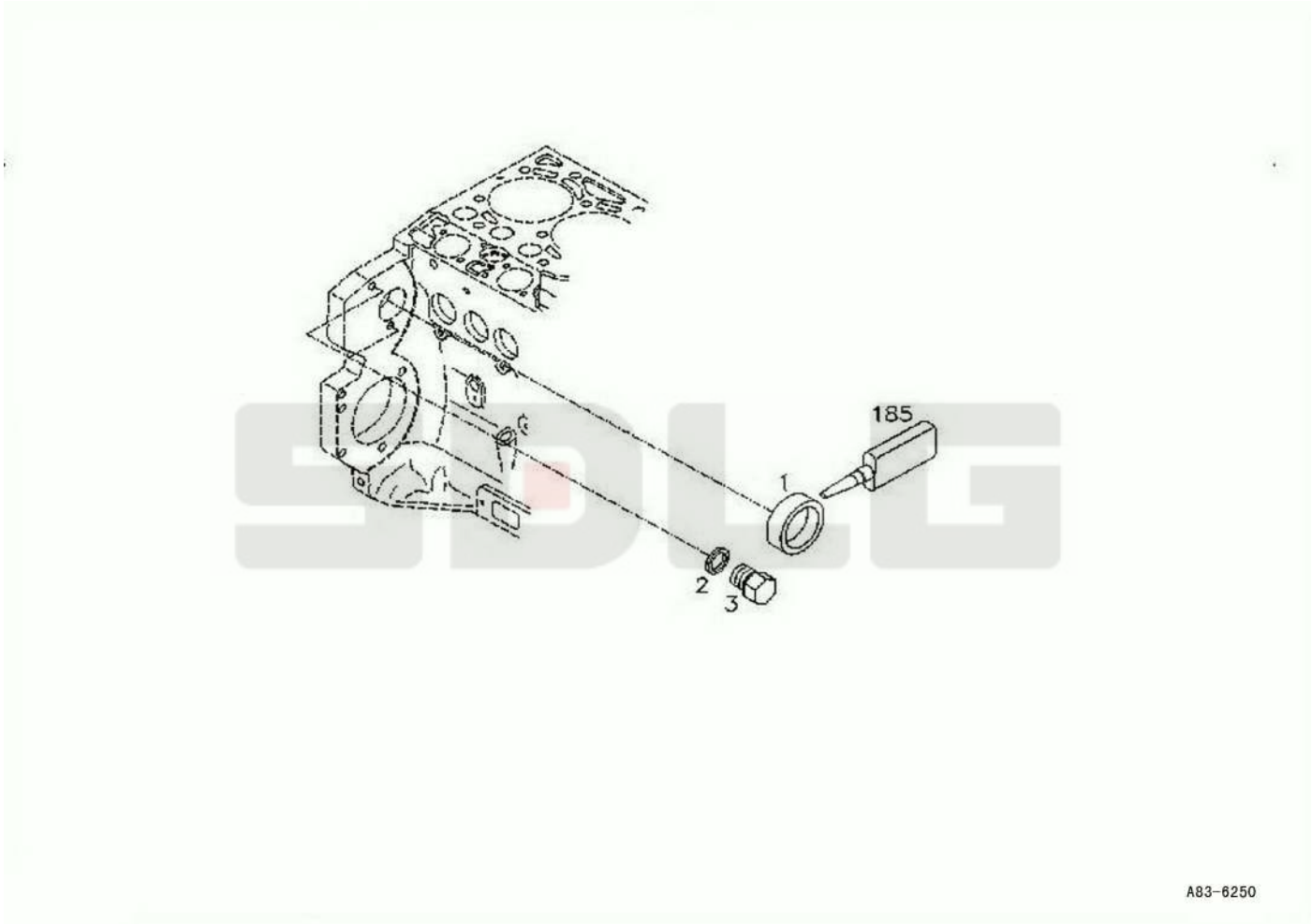

Key	Part No.	Description	Spare parts Y/N	Qty	Remarks
1	4110000509285	Plug	Y	1	
2	4110000509191	Sealing ring	Y	2	
3	4110000509286	Plug	Y	2	

Plug assembly

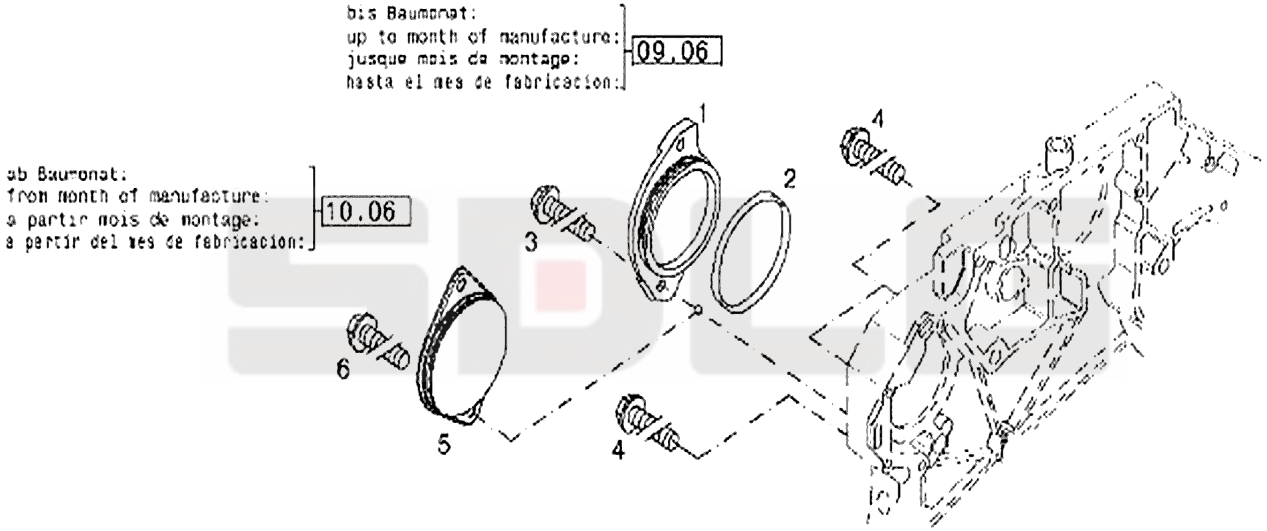

A84-6250

Key	Part No.	Description	Spare parts Y/N	Qty	Remarks
1	kongbai	Kongbai	N	1	
2	4110000509284	O-ring	Y	1	
3	kongbai	Kongbai	N	1	
4	kongbai	Kongbai	N	1	
5	4110000727137	Cover	N	1	
6	4110000509160	Bolt	Y	2	

Timing gear cover

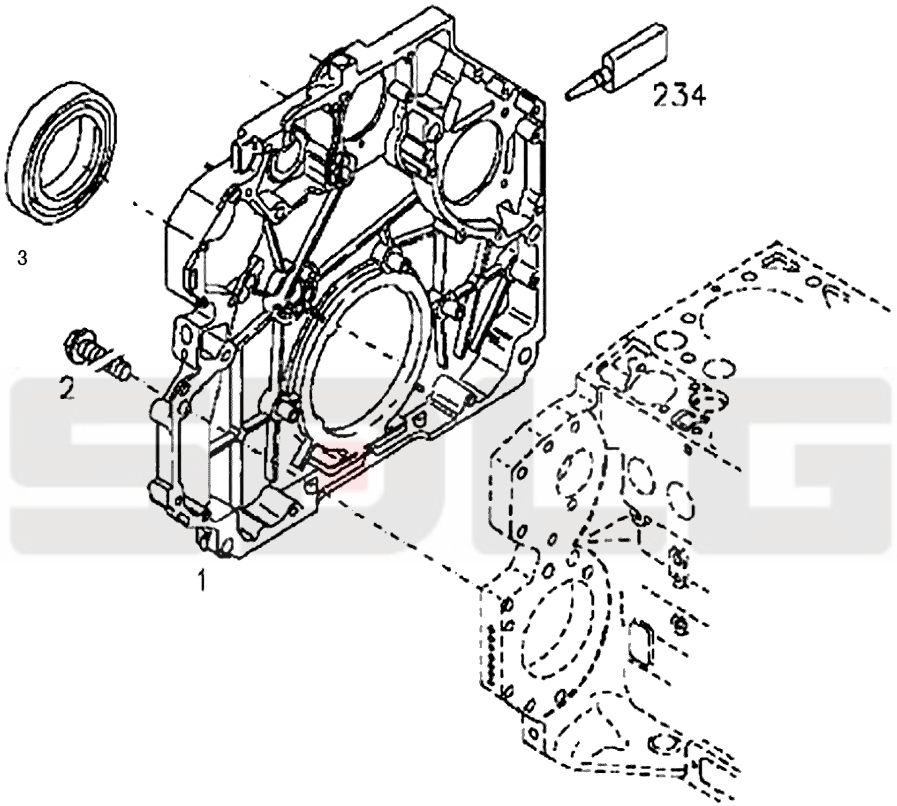

A85-6250

Key	Part No.	Description	Spare parts Y/N	Qty	Remarks
1	4110000970182	Gear housing	Y	1	
2	4110000509039	Bolt	Y	12	
3	4110000970181	Lip seal	Y	1	

Plug assembly

Key	Part No.	Description	Spare parts Y/N	Qty	Remarks
1	4110000727002	Plug	Y	1	

Valve cover

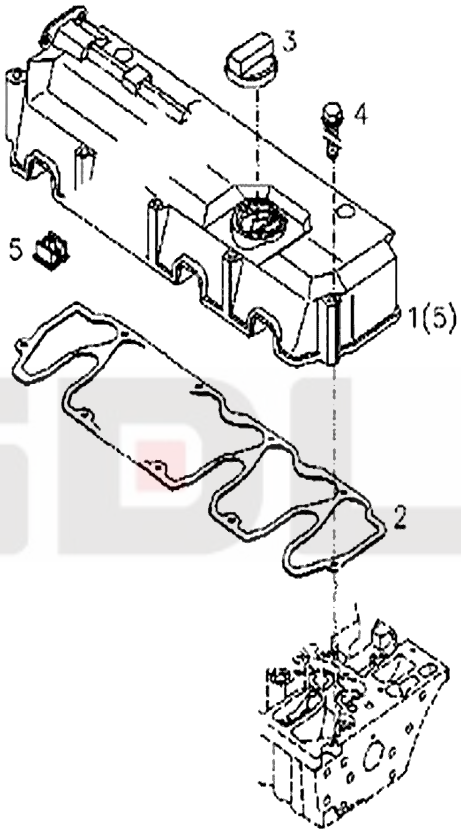

A87-6250

Key	Part No.	Description	Spare parts Y/N	Qty	Remarks
1	4110000970048	Cover	Y	1	
2	4110000970215	Valve cover gasket	Y	1	
3	4110000509047	Oil filler cap	Y	1	
4	4110000970053	Screw	Y	13	
5	4110000970049	Cap	N	1	

Oil filter kit

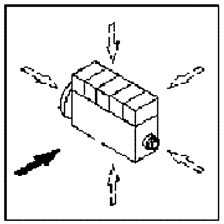

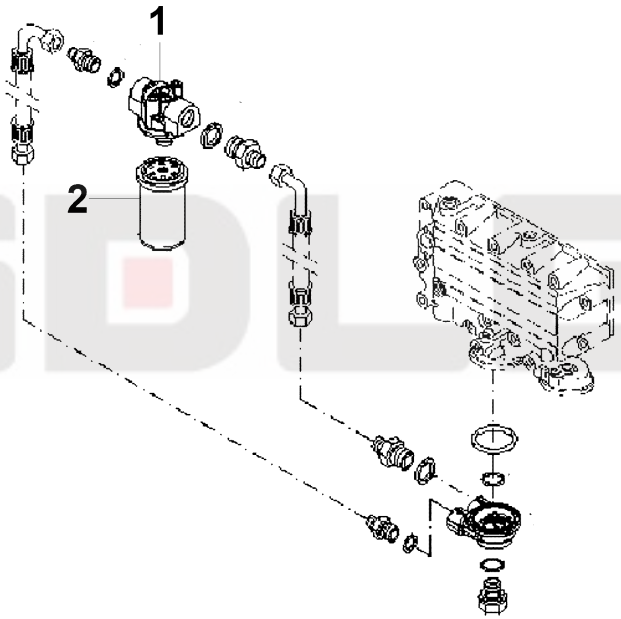

000 ©

Key	Part No.	Description	Spare parts Y/N	Qty	Remarks
1	4110000727140	Oil filter	Y	1	
2	4110000727085	Oil filter	Y	1	

Air vent pipe

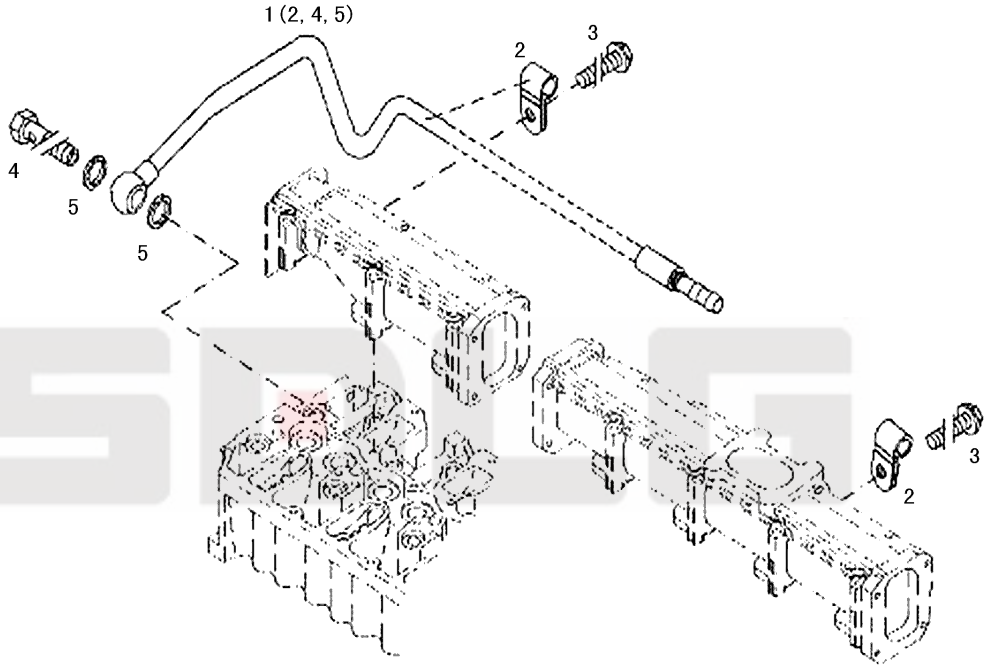

A89-6250

Key	Part No.	Description	Spare parts Y/N	Qty	Remarks
1	4110000970105	Breather pipe	Y	1	
2	4110000970107	Clamp	Y	3	
3	4110000727192	Screw	Y	3	
4	4110000509292	Hollow screw	Y	1	
5	4110000509191	Sealing ring	Y	2	

Installation kit

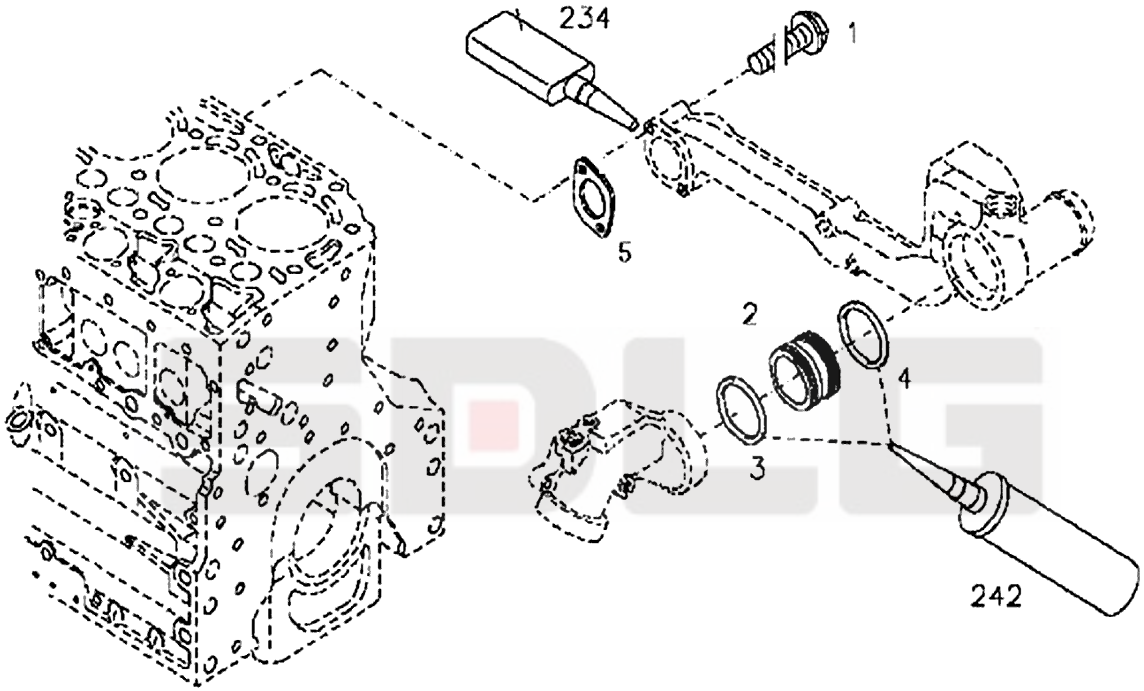

A90-6250

Key	Part No.	Description	Spare parts Y/N	Qty	Remarks
1	4110000509187	Screw	N	3	
2	4110000970102	Water hose	Y	1	
3	4110000970106	O-ring	Y	1	
4	4110000509252	O-ring	Y	1	
5	4110000970020	Gasket	Y	1	

Thermostat kit

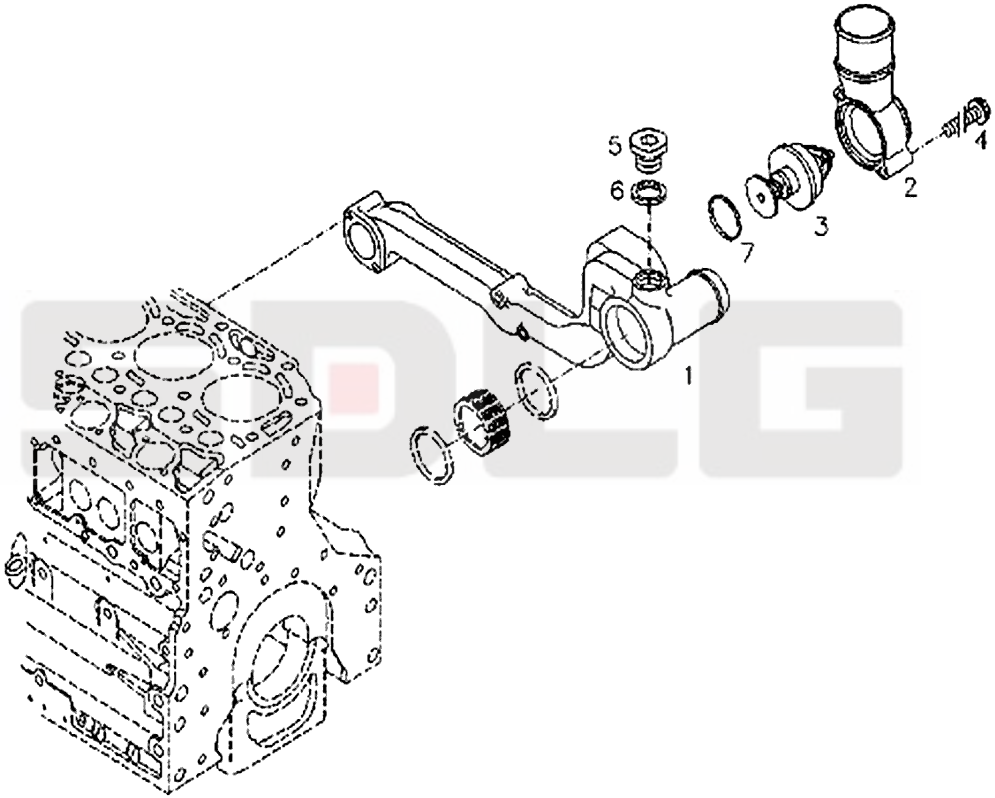

A91-6250

Key	Part No.	Description	Spare parts Y/N	Qty	Remarks
1	4110000970103	Water pipe	Y	1	
2	4110000970185	Cap	Y	1	
3	4110000970108	Thermostat	Y	1	
4	4110000509187	Screw	N	2	
5	4110000727018	Plug	Y	1	
6	4110000970119	Gasket	Y	1	
7	4110000509268	O-ring	Y	1	

Pipe

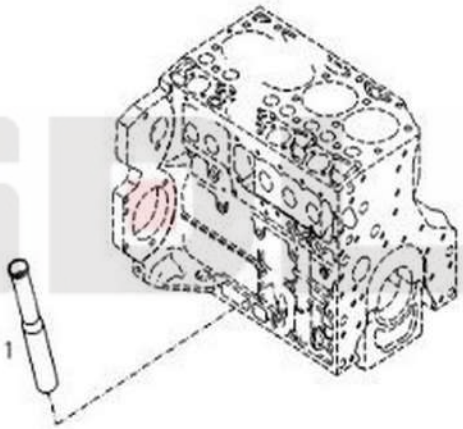

A92-6250

Key	Part No.	Description	Spare parts Y/N	Qty	Remarks
1	4110000727274	Pipe	Y	1	

Oil dipstick

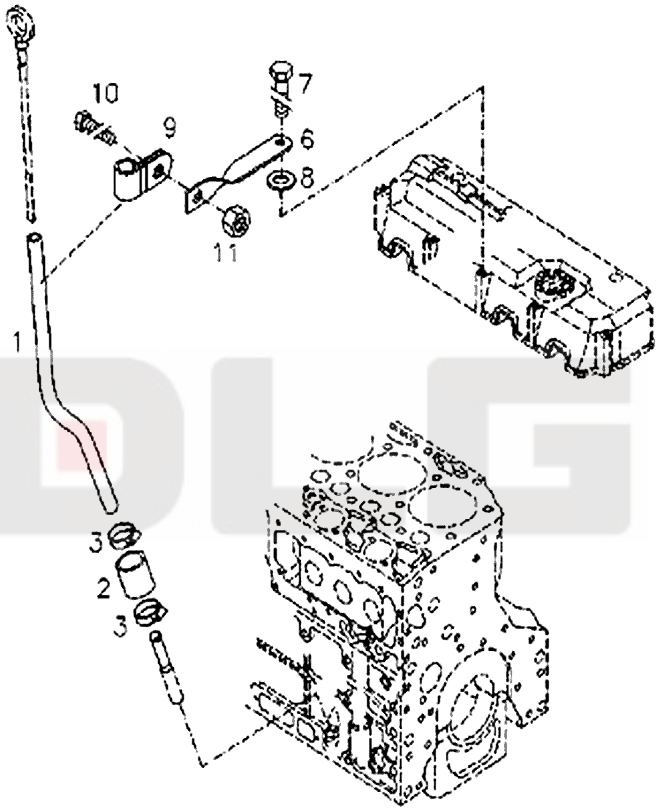

A93-6250

Key	Part No.	Description	Spare parts Y/N	Qty	Remarks
1	4110000970155	Dipstick	Y	1	
2	4110000970143	Hose	Y	1	
3	4110000509303	Clamp	Y	2	
4	kongbai	Kongbai	N	1	
5	kongbai	Kongbai	N	1	
6	4110000970154	Bracket	Y	1	
7	4110000970135	Screw	Y	1	
8	4110000970148	Plain washer	Y	1	
9	4110000509311	Clamp	Y	1	
10	4110000970127	Screw	Y	1	
11	4110000509282	Nut	N	1	

Oil dipstick

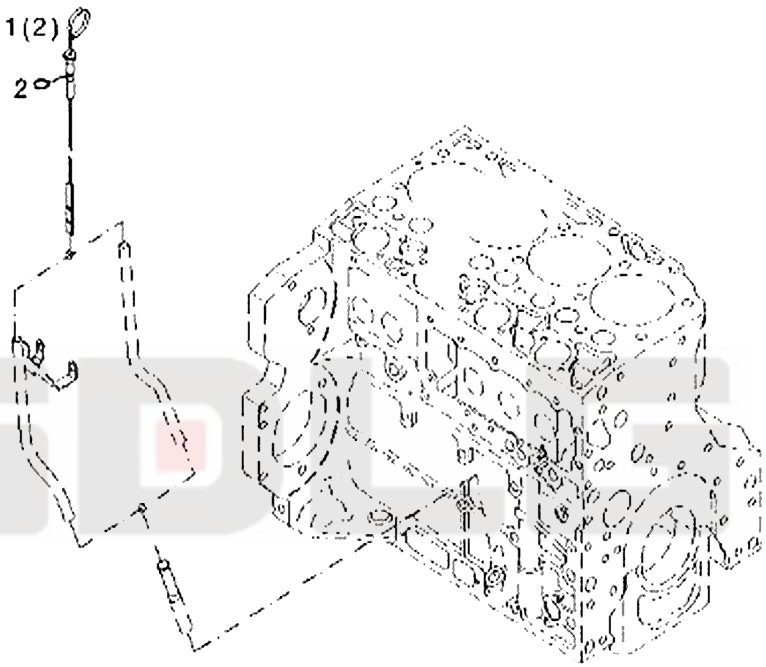

A94-6250

Key	Part No.	Description	Spare parts Y/N	Qty	Remarks
1	4110000970207	Dipstick	Y	1	

Oil pan

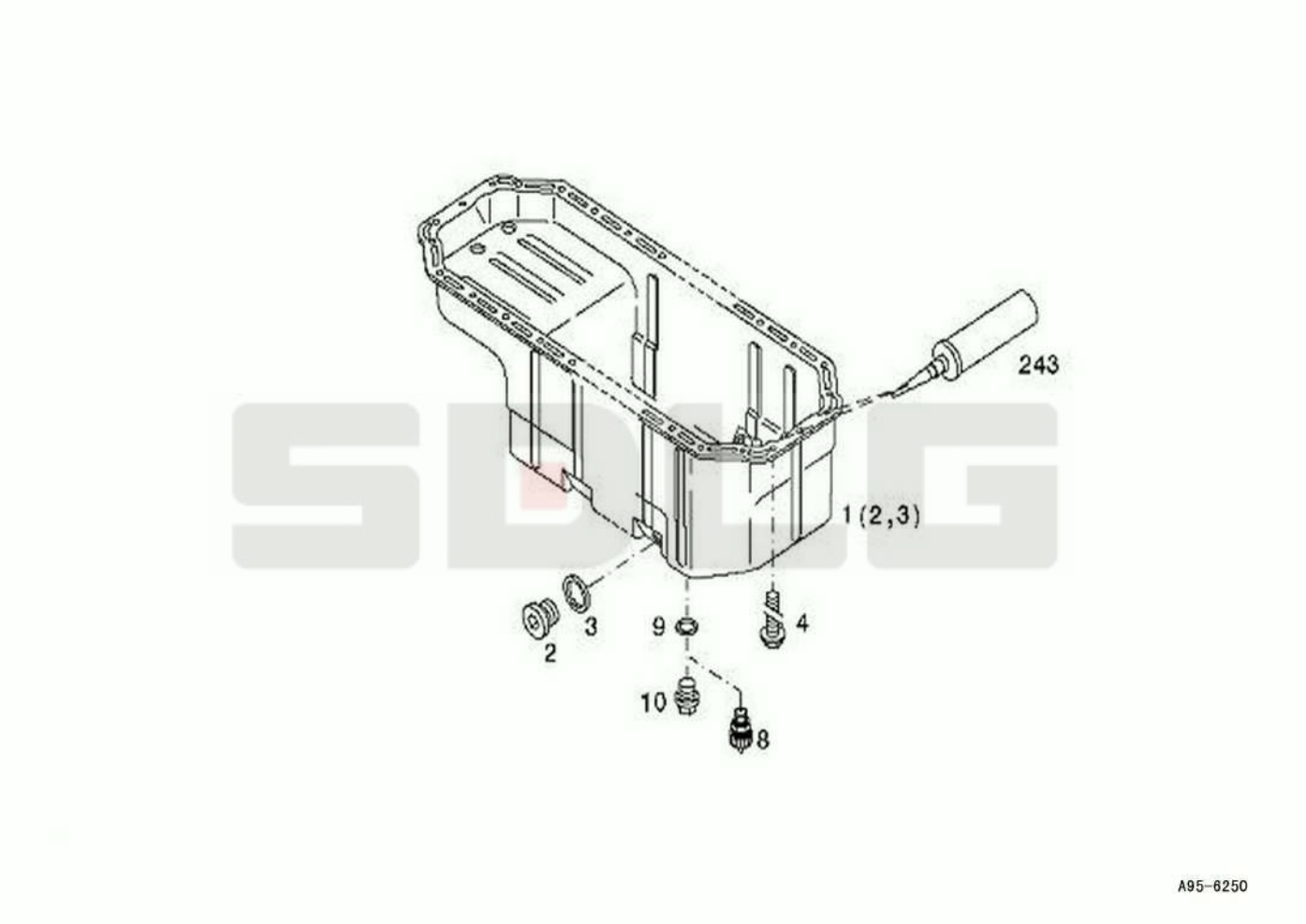

Key	Part No.	Description	Spare parts Y/N	Qty	Remarks
1	4110000970160	Oil pan	Y	1	
2	4110000970123	Plug	Y	1	
3	4110000970124	Gasket	Y	1	
4	4110000509246	Screw	Y	34	
5	kongbai	Kongbai	N	1	
6	kongbai	Kongbai	N	1	
7	kongbai	Kongbai	N	1	
8	4110000970141	Drain valve	N	1	
9	4110000727012	Sealing ring	Y	1	
10	4110000970142	Nipple	Y	1	

Oil strainer assembly

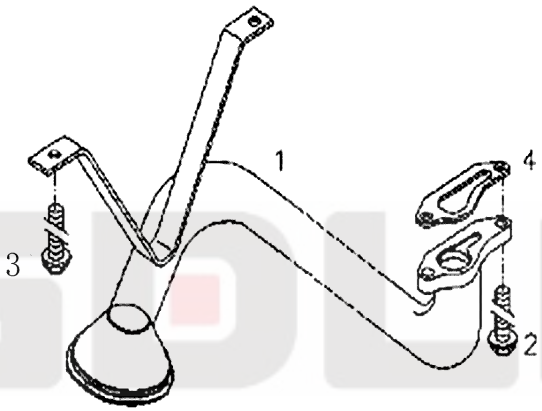

A96-6250

Key	Part No.	Description	Spare parts Y/N	Qty	Remarks
1	4110000970168	Oil collector	Y	1	
2	4110000509208	Screw	Y	2	
3	4110000509246	Screw	Y	2	
4	4110000509159	Gasket	Y	1	

Flywheel assembly

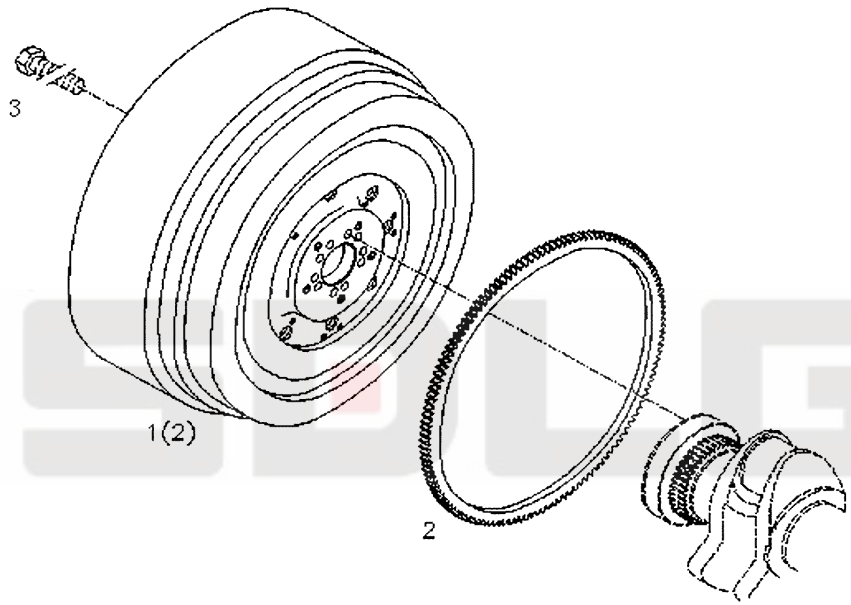

A97-6250

Key	Part No.	Description	Spare parts Y/N	Qty	Remarks
1	4110000970158	Flywheel	Y	1	
2	4110000509078	Screw	Y	10	

Crankcase ventilation kit

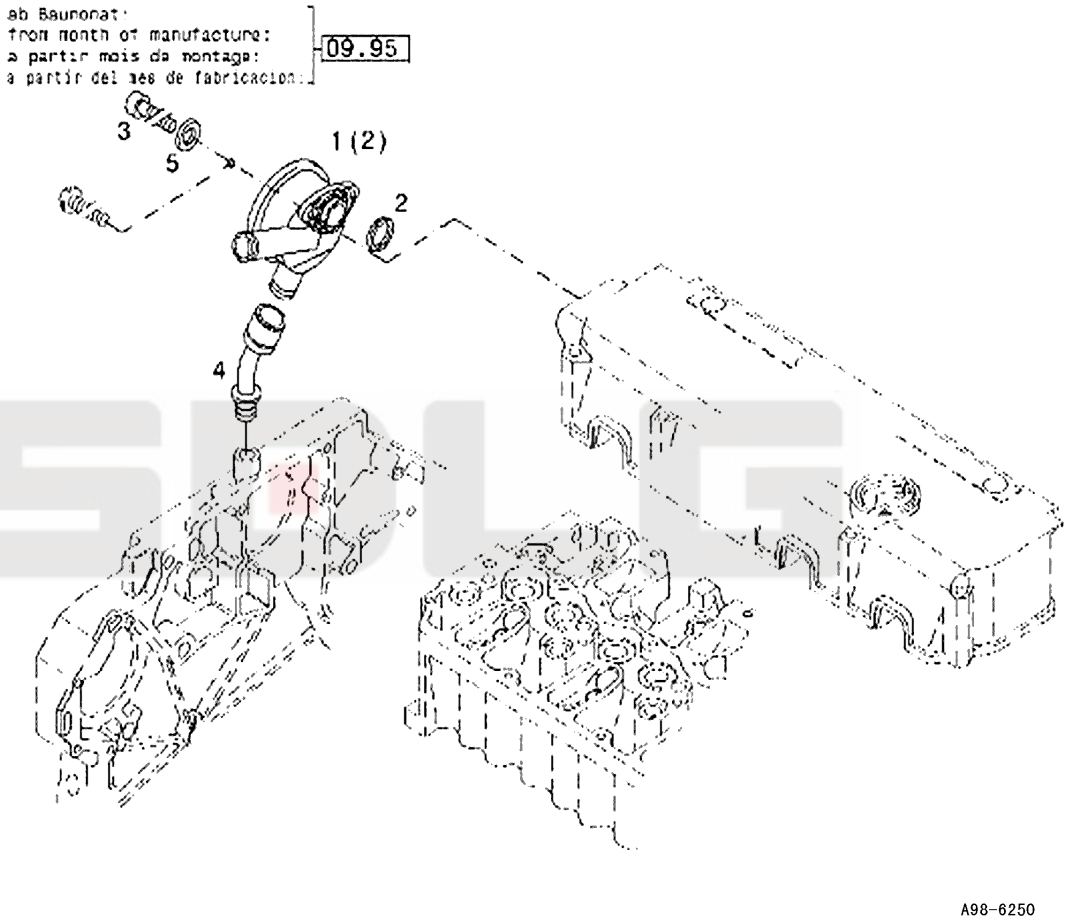

Key	Part No.	Description	Spare parts Y/N	Qty	Remarks
1	4110001009056	Pressure regulator	Y	1	
2	4110000509168	Rubber sleeve	Y	1	
3	4110000727172	Screw	N	2	
4	4110000509166	Plain washer	Y	2	

Breather pipe

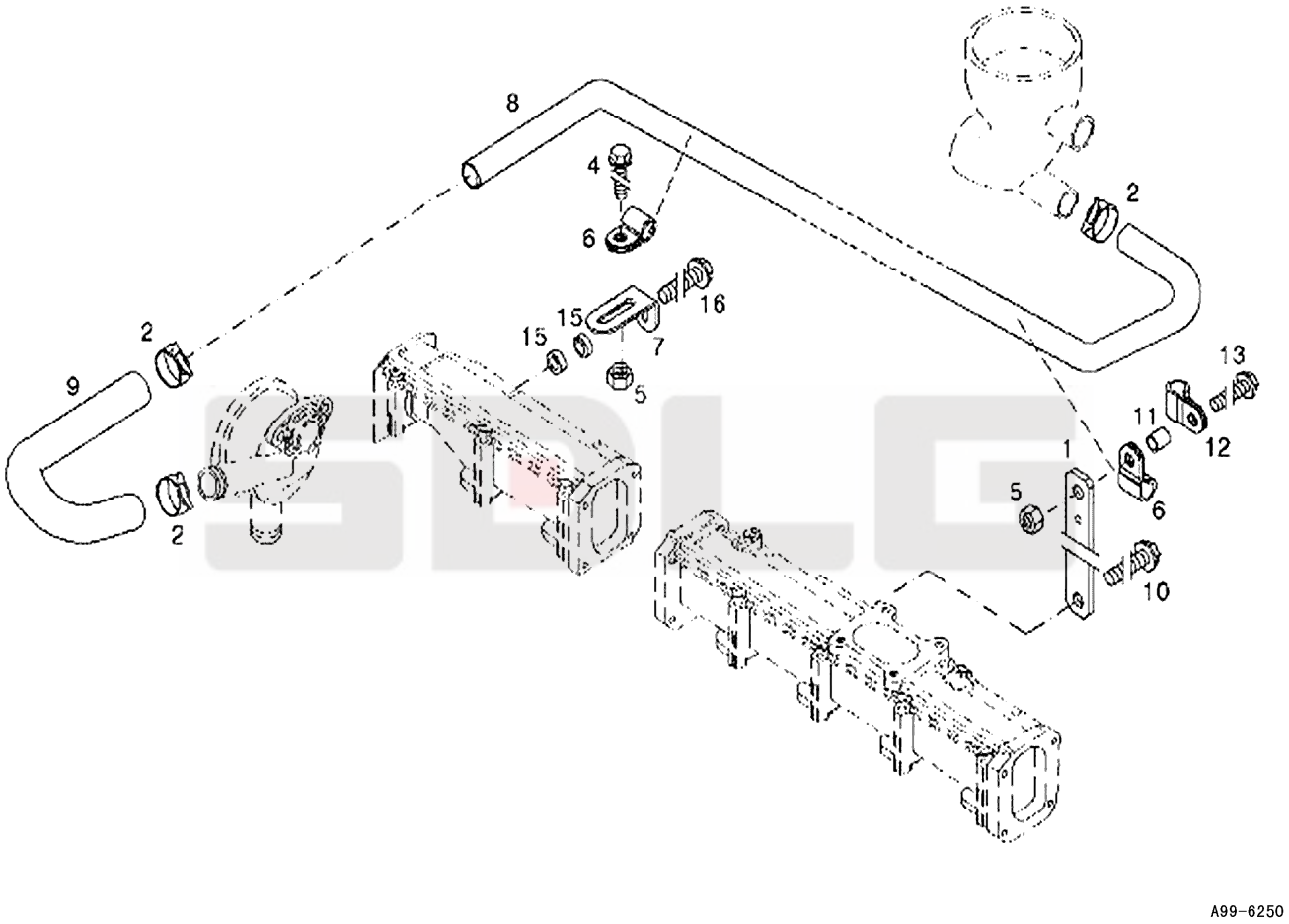

Key	Part No.	Description	Spare parts Y/N	Qty	Remarks
1	4110000970162	Connecting plate	Y	1	
2	4110000509169	Spring clip	N	3	
3	kongbai	Kongbai	N	1	
4	4110000509173	Screw	Y	2	
5	4110000509282	Nut	N	2	
6	4110000970126	Clamp	Y	2	
7	4110000970165	Bracket	Y	1	
8	4110000970187	Hose	Y	1	
9	4110000970189	Hose	Y	1	
10	4110000509039	Bolt	Y	1	
11	kongbai	Kongbai	N	1	
12	kongbai	Kongbai	N	1	
13	kongbai	Kongbai	N	1	
14	kongbai	Kongbai	N	1	
15	4110000970163	Bushing	Y	2	
16	4110000509246	Screw	Y	1	

Air hose

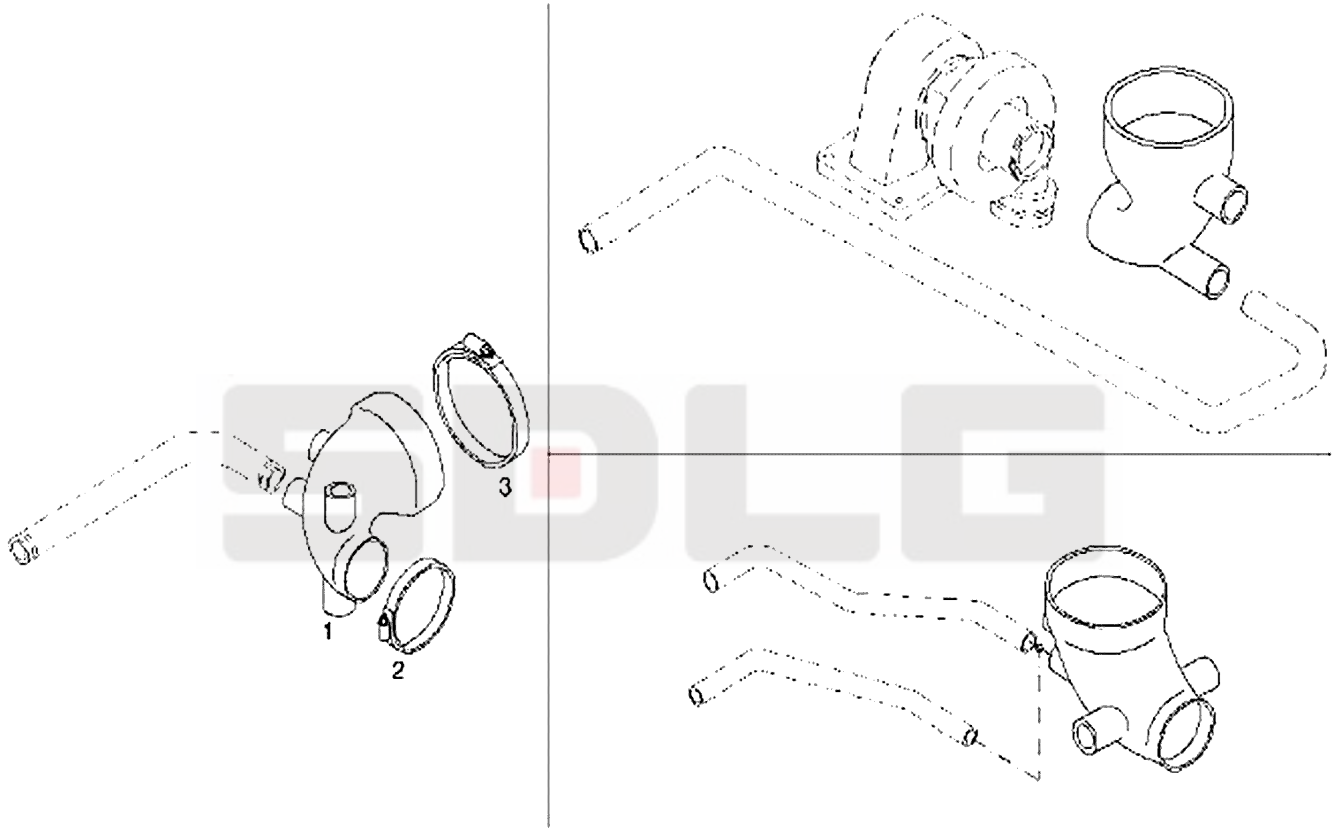

A100-6250

Key	Part No.	Description	Spare parts Y/N	Qty	Remarks
1	4110000970191	Pipe	Y	1	
2	4110000970133	Clip	Y	1	
3	4110000970134	Clip	Y	1	

Transport support

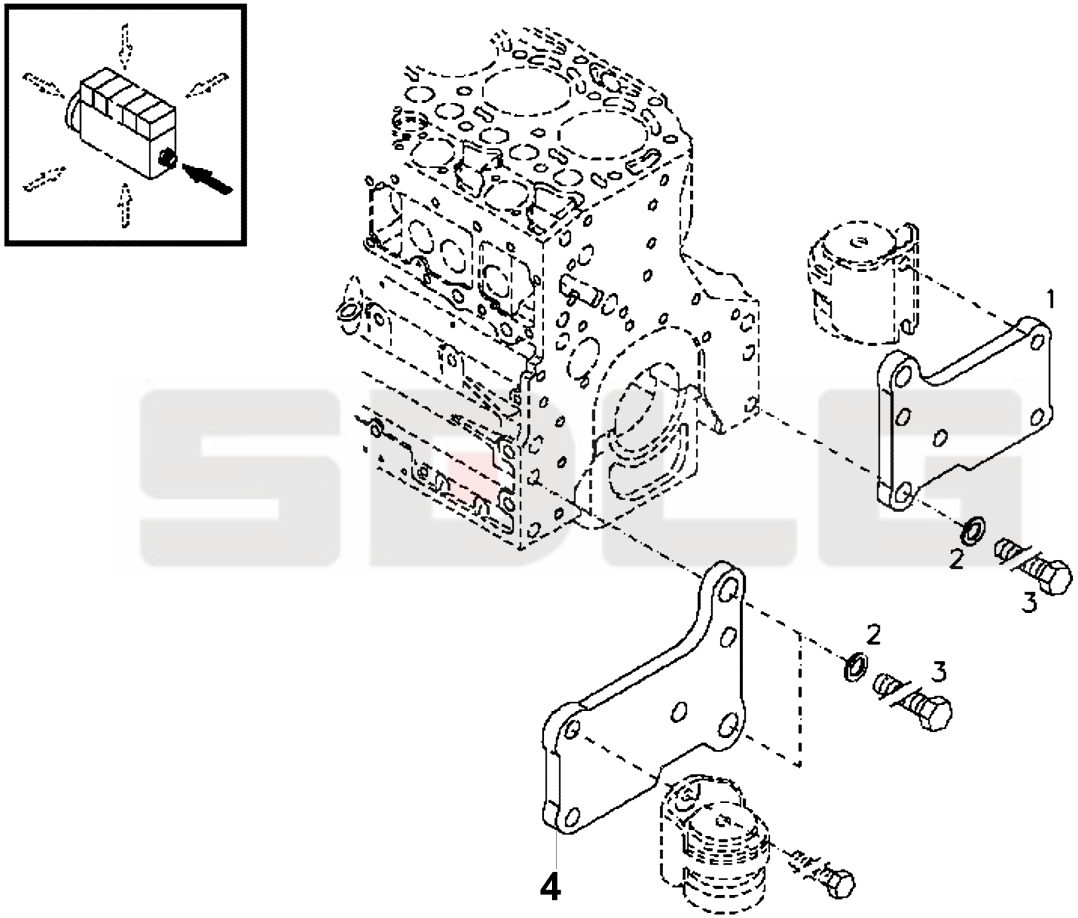

Key	Part No.	Description	Spare parts Y/N	Qty	Remarks
1	4110000727155	Engine mounting	Y	1	
2	4110000727046	Plain washer	Y	4	
3	4110000727171	Screw	Y	4	
4	4110000727156	Engine mounting	Y	1	

Starter motor

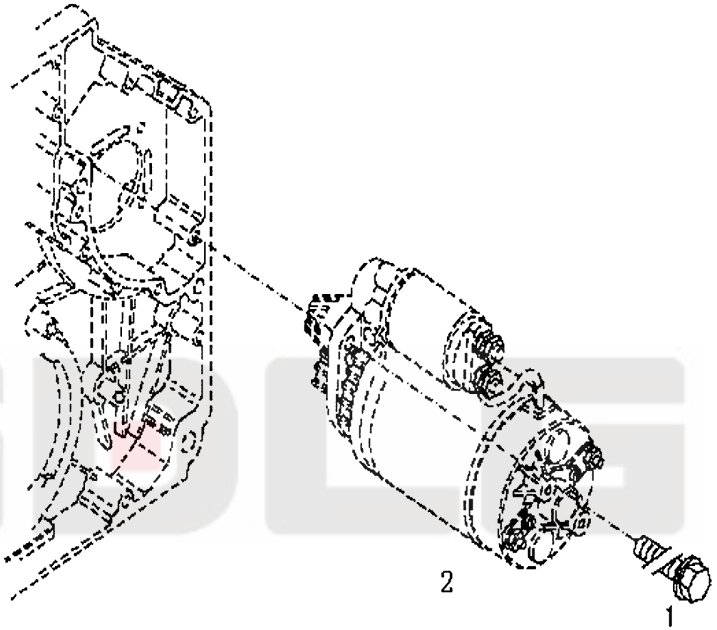

A102-6250

Key	Part No.	Description	Spare parts Y/N	Qty	Remarks
1	4110000509315	Screw	Y	1	
2	4110000988167	Starter motor	Y	1	

Installation kit

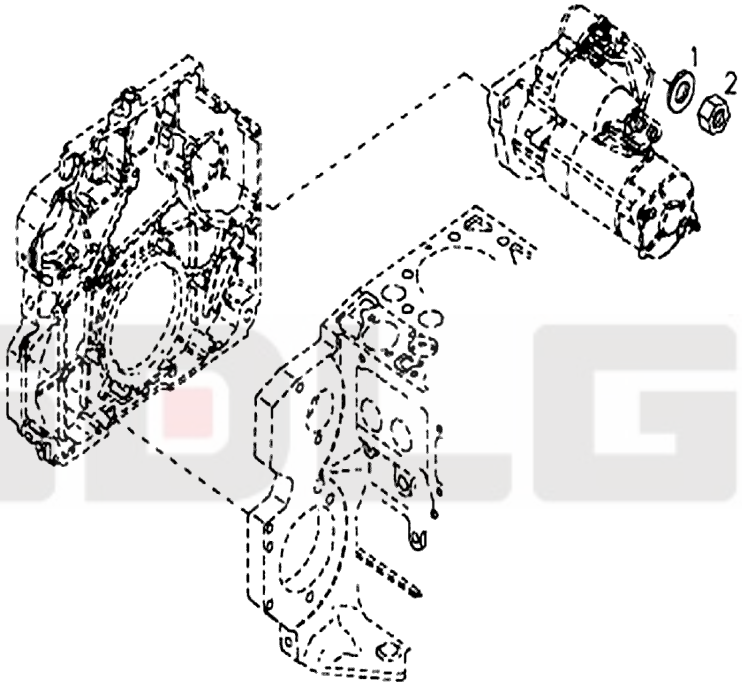

A103-6250

Key	Part No.	Description	Spare parts Y/N	Qty	Remarks
1	4110000727049	Plain washer	Y	2	
2	4110000727177	Hexagon nut	N	2	

Plug assembly

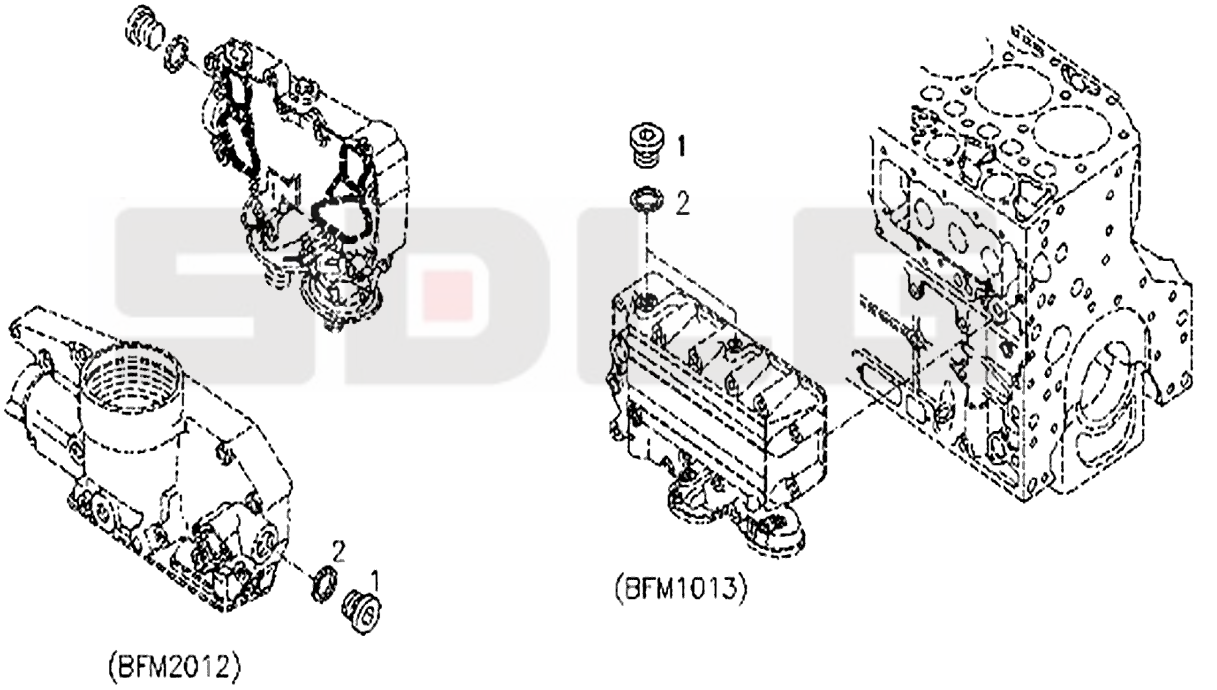

A104-6250

Key	Part No.	Description	Spare parts Y/N	Qty	Remarks
1	4110001841047	Plug	Y	1	
2	4110000509307	Sealing ring	Y	1	

Plug assembly

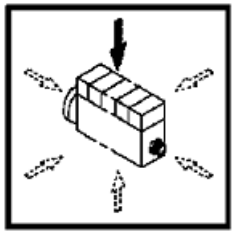

Key	Part No.	Description	Spare parts Y/N	Qty	Remarks
1	4110001007075	Plug	Y	1	
2	4110001007076	O-ring	Y	1	

Lifting eye

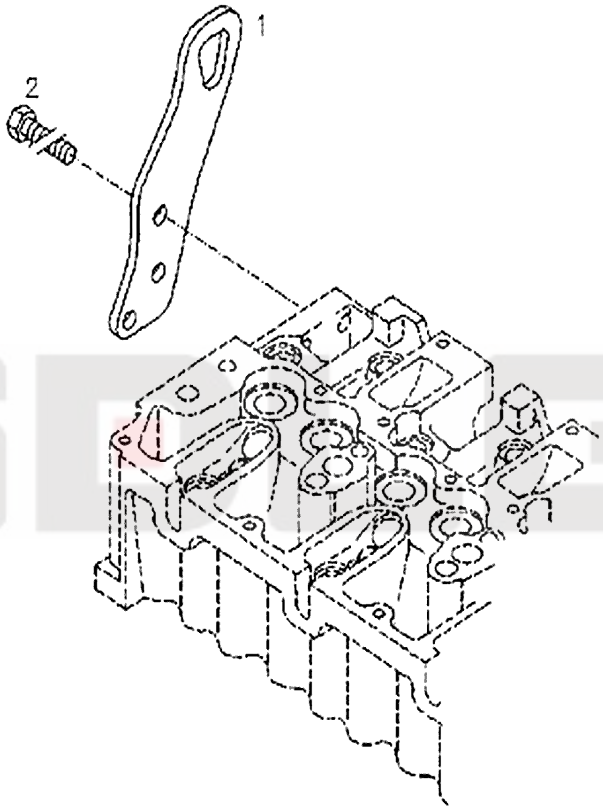

A106-6250

Key	Part No.	Description	Spare parts Y/N	Qty	Remarks
1	4110000727003	Lifting bracket	Y	1	
2	4110000509052	Bolt	Y	3	

Control unit

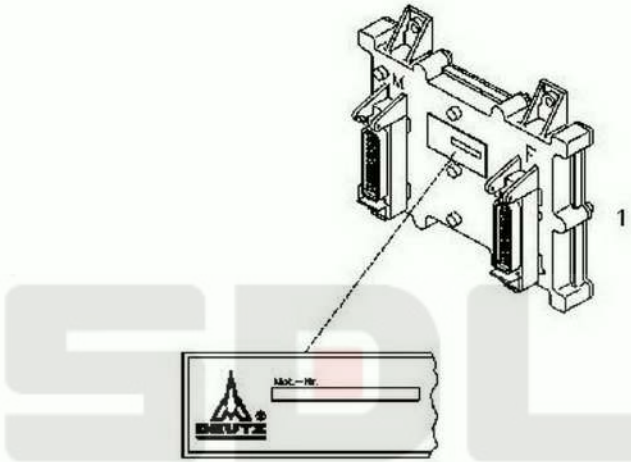

A107-6250

Key	Part No.	Description	Spare parts Y/N	Qty	Remarks
1	4110000970220	Engine control module	Y	1	

Sensor kit

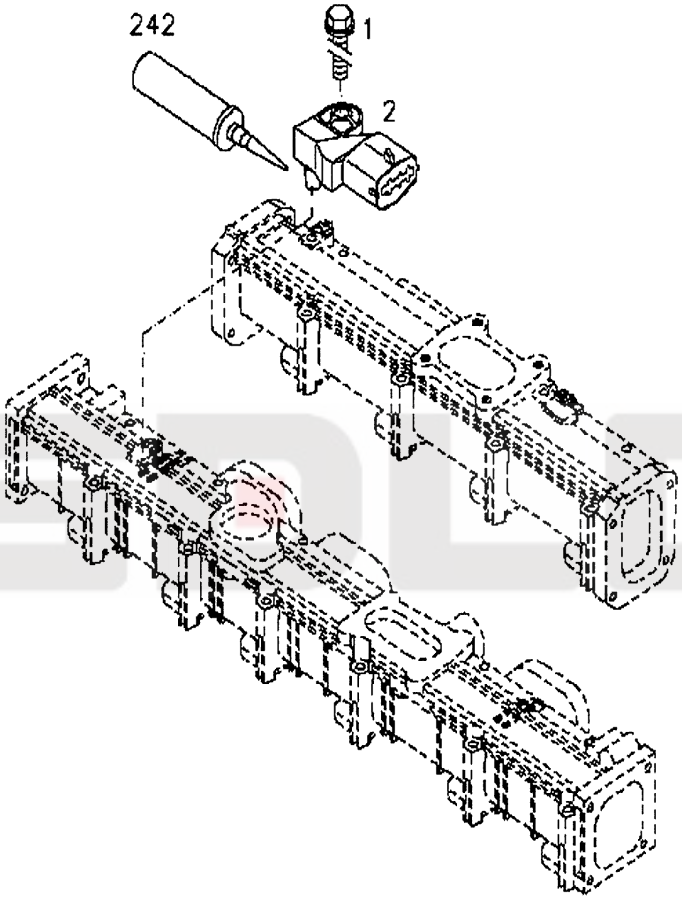

A108-6250

Key	Part No.	Description	Spare parts Y/N	Qty	Remarks
1	4110000727045	Screw	Y	1	
2	4110000727110	Temperature sensor	Y	1	

Cable harness

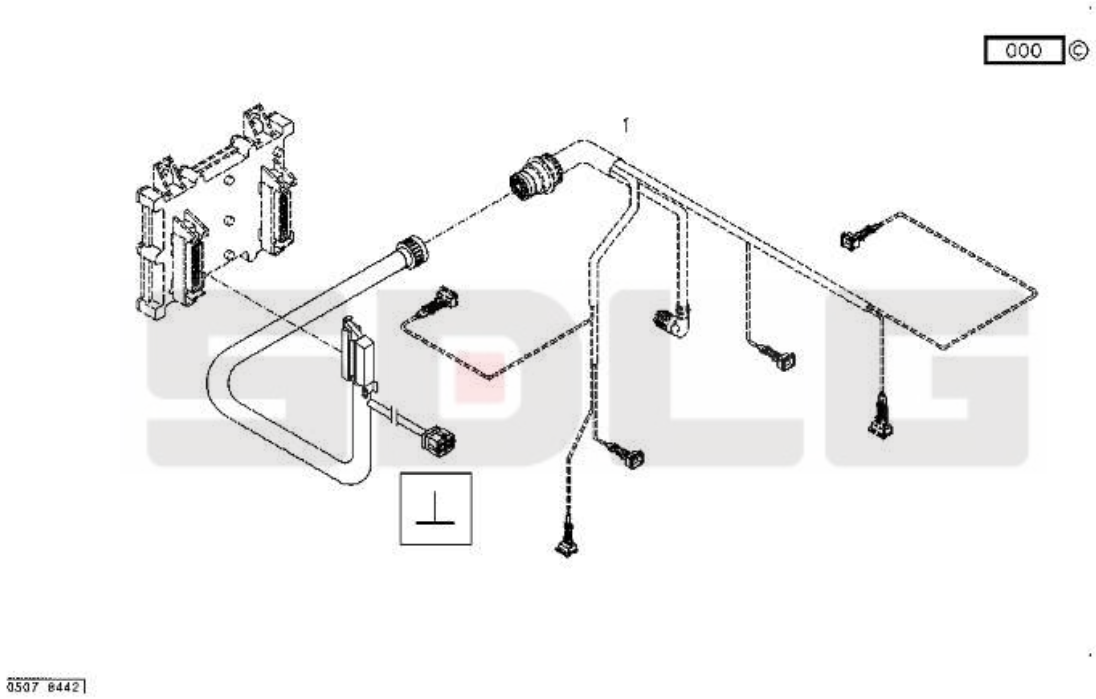

Key	Part No.	Description	Spare parts Y/N	Qty	Remarks
1	4110000970032	Cable	Y	1	

SDLG

Plug

Key	Part No.	Description	Spare parts Y/N	Qty	Remarks
1	4110000727047	Plug	Y	6	

Tachometer sensor

Key	Part No.	Description	Spare parts Y/N	Qty	Remarks
1	4110000970027	Engine speed sensor	Y	1	
2	4110000727192	Screw	Y	1	

Impulse sensor

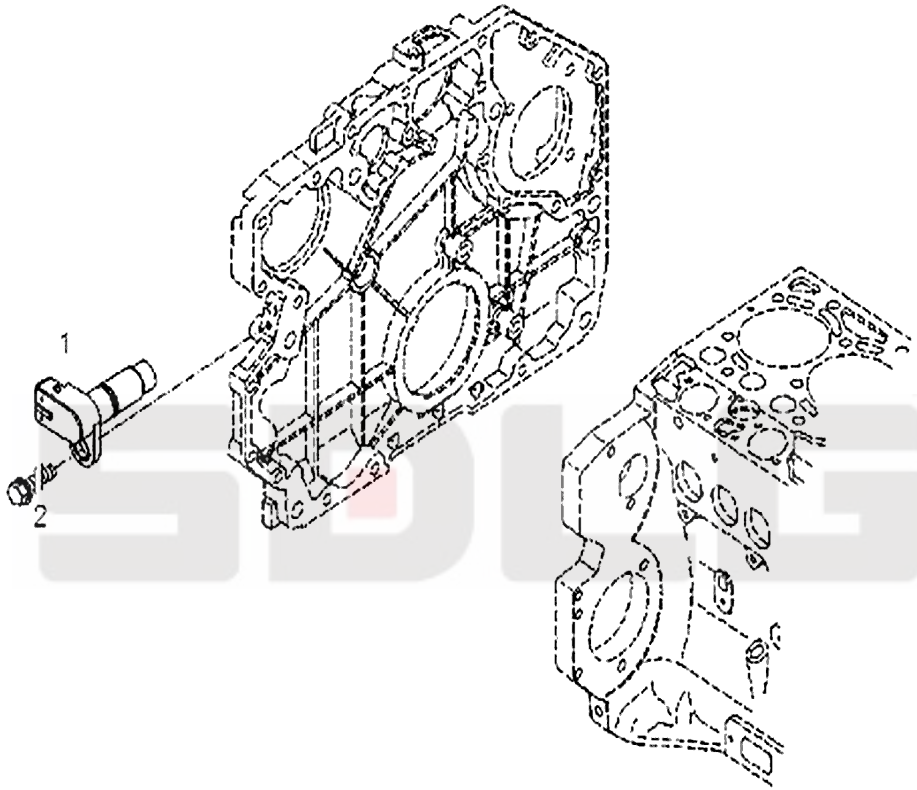

A114-6250

Key	Part No.	Description	Spare parts Y/N	Qty	Remarks
1	4110000970026	Impulse sensor	Y	1	
2	4110000727193	Screw	Y	1	

Fuel filling pump

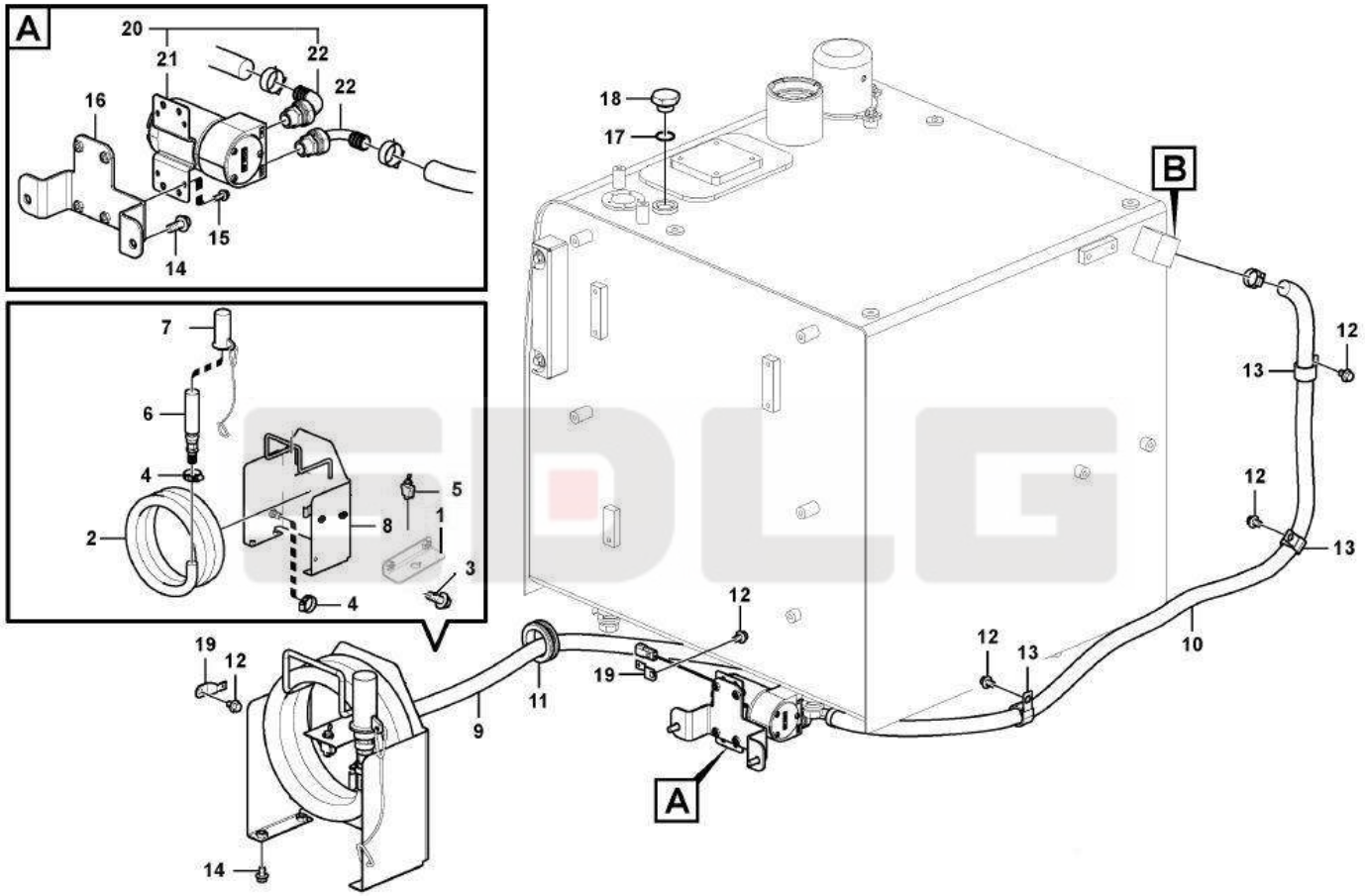

Key	Part No.	Description	Spare parts Y/N	Qty	Remarks
1	14400486	Bracket	N	1	
2	14400485	Fuel hose	N	1	
3	11210083	Six point socket screw	Y	2	
4	11216507	Hose clamp	Y	2	
5	11219881	Toggle switch	Y	1	
6	11216193	Valve	N	1	
7	11219148	Rubber cover	Y	1	
8	14400484	Bracket	N	1	
9	14400488	Fuel hose	Y	1	
10	11219156	Fuel hose	Y	1	
11	11211808	Grommet	Y	1	
12	11210036	Flange screw	Y	3	
13	11210259	Clip	Y	3	
14	11210032	Flange screw	Y	7	
15	11210038	Flange screw	Y	4	
16	14400491	Bracket	Y	1	
17	11210169	O-ring	Y	1	
18	11210616	Plug	Y	1	
19	14400370	Strip clamp	Y	2	
20	14400490	Fuel pump	N	1	
21	11219155	Refueling pump	Y	1	
22	11216191	Adapter	Y	2	

SDLG

B

CONTROL SYSTEM

SHANDONG LINGONG CONSTRUCTION MACHINERY CO.,LTD.

Battery

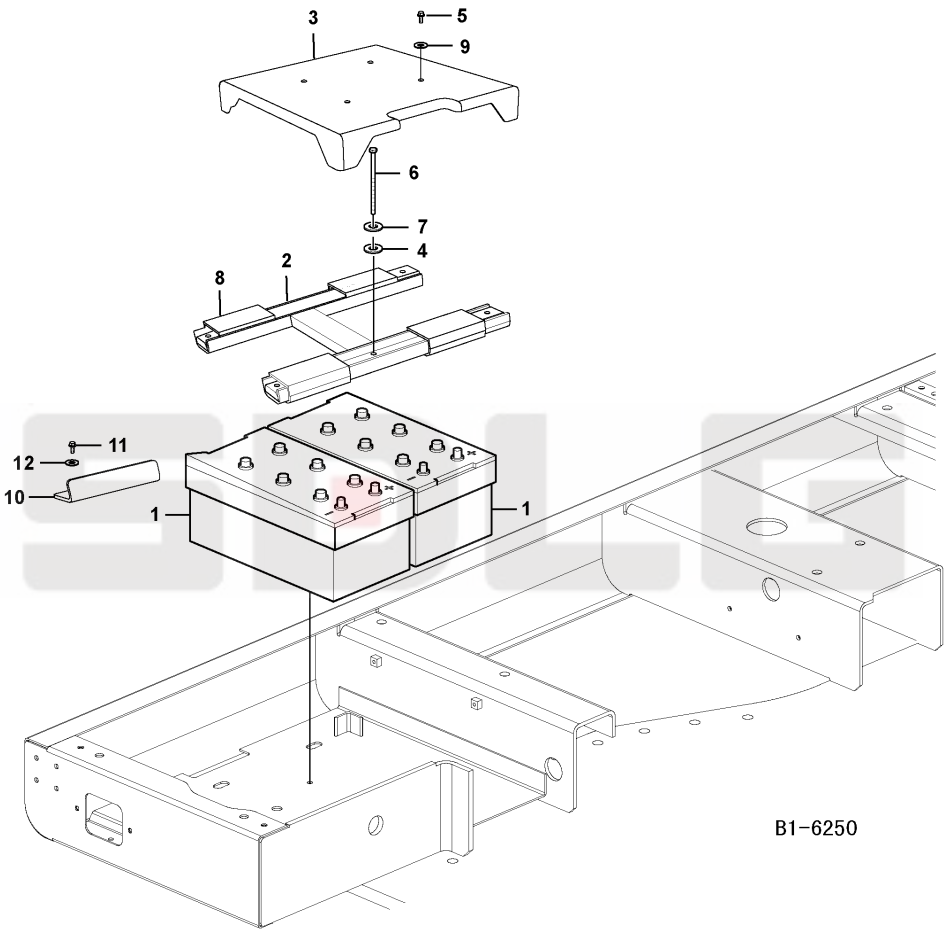

Key	Part No.	Description	Spare parts Y/N	Qty	Remarks
1	11216739	Battery	Y	2	
2	11219488	Bracket	Y	1	
3	14403753	Cover	Y	1	
4	11214769	Washer	N	2	
5	11210036	Flange screw	Y	4	
6	11214401	Bolt	Y	2	
7	11210065	Spring washer	Y	2	
8	kongbai	Kongbai	N	4	
9	11214460	Washer	Y	4	
10	11214403	Bracket	Y	2	
11	11210122	Hexagon screw	Y	4	
12	11212281	Washer	Y	4	

Key system

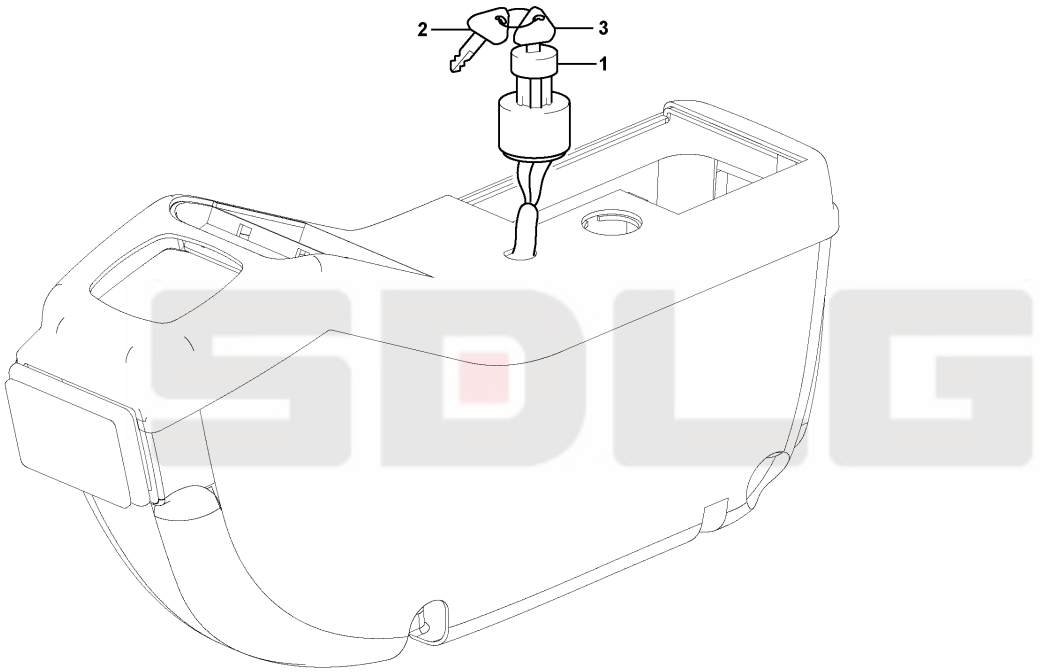

B2-6250

Key	Part No.	Description	Spare parts Y/N	Qty	Remarks
1	11217633	Starter switch	Y	1	
2	11217634	Key	N	2	
3	11217635	Key	N	1	

Headlamp

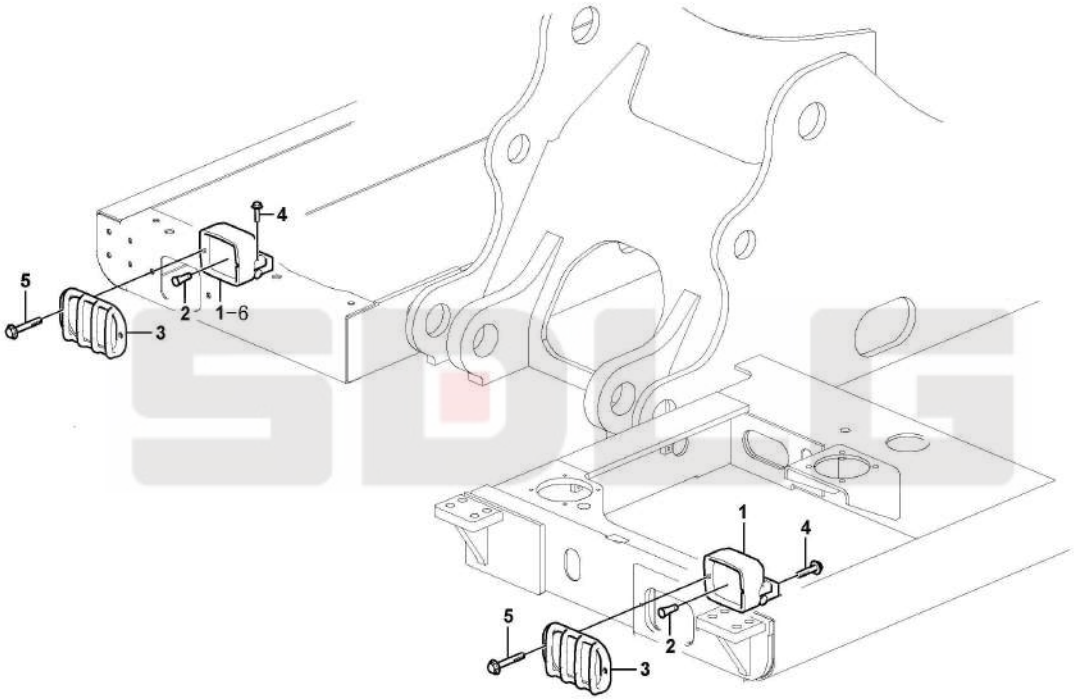

B3-6250

Key	Part No.	Description	Spare parts Y/N	Qty	Remarks
1	14400474	Work lamp	Y	2	
2	11211321	Bulb	N	1	
3	11218915	Lamp shroud	Y	2	
4	11210036	Flange screw	Y	5	
5	11210034	Flange screw	Y	4	
6	14400669	Lamp shroud	Y	1	

Work lamp

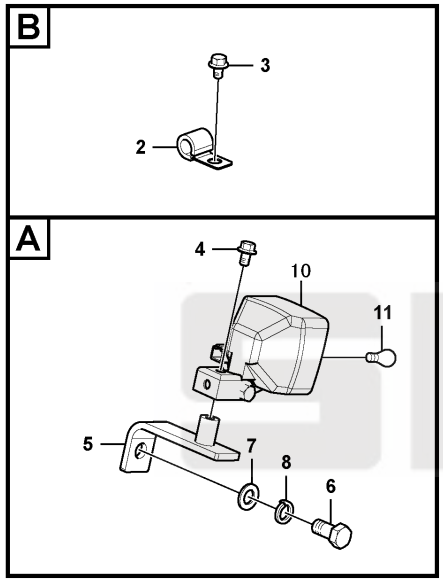

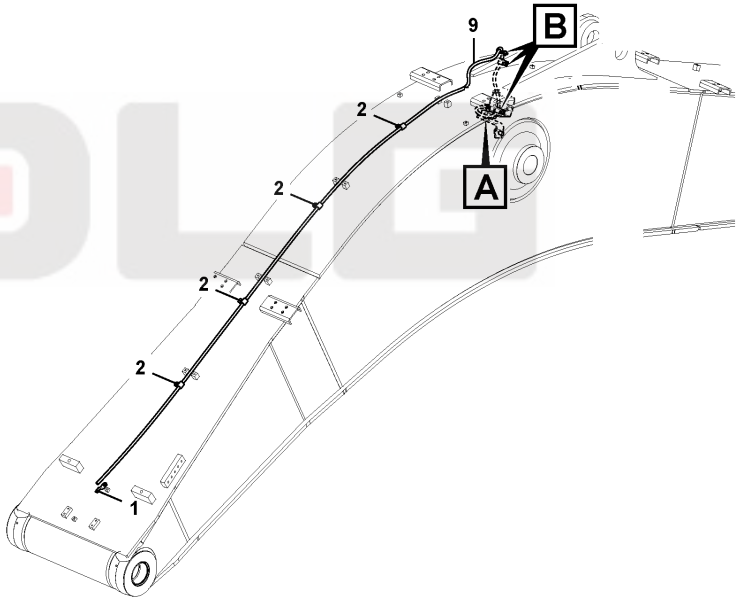

B4-6250

Key	Part No.	Description	Spare parts Y/N	Qty	Remarks
1	11210537	Clip	Y	1	
2	11210257	Clip	Y	8	
3	11210042	Flange screw	Y	5	
4	11210036	Flange screw	Y	1	
5	14401815	Bracket	Y	1	
6	11210101	Hexagon screw	Y	1	
7	11214770	Washer	N	1	
8	11210067	Spring washer	Y	1	
9	14401541	Wiring harness	Y	1	
10	14400474	Work lamp	Y	1	
11	11210028	Bulb	N	1	

Horn

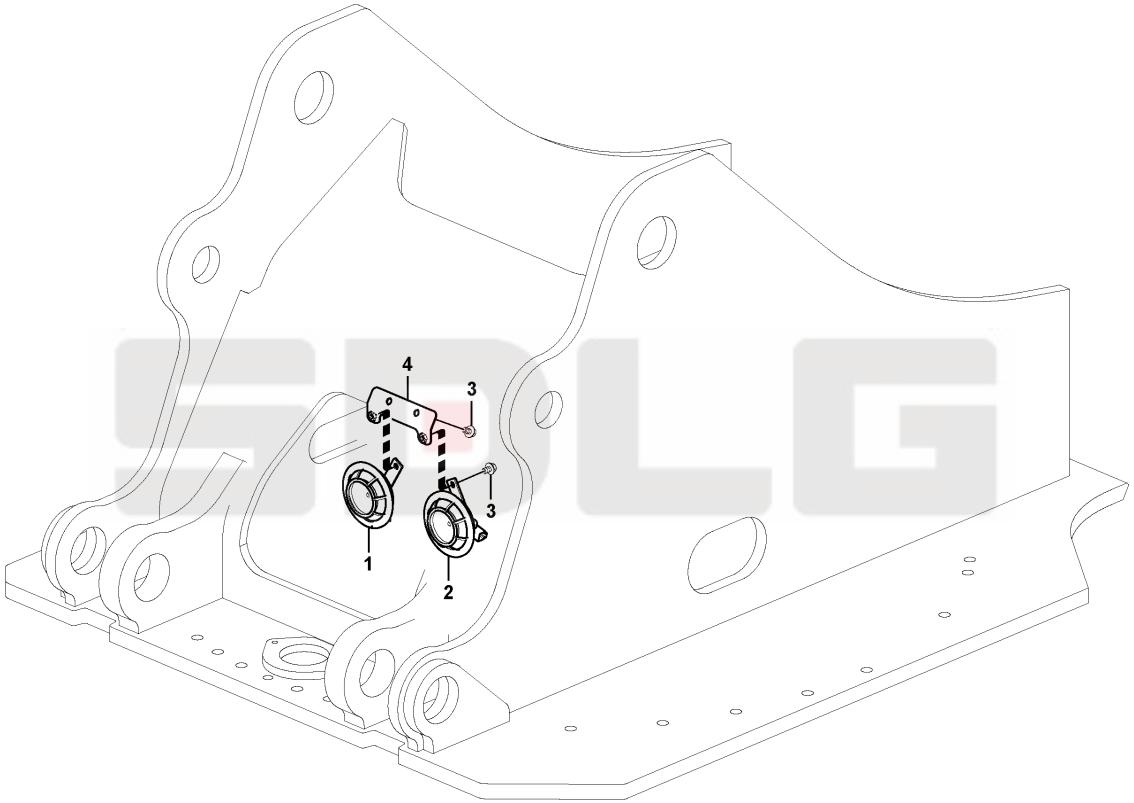

B5-6250

Key	Part No.	Description	Spare parts Y/N	Qty	Remarks
1	11211268	Horn	Y	1	
2	11211269	Horn	Y	1	
3	11210036	Flange screw	Y	4	
4	11219639	Bracket	N	1	

Windscreen washer

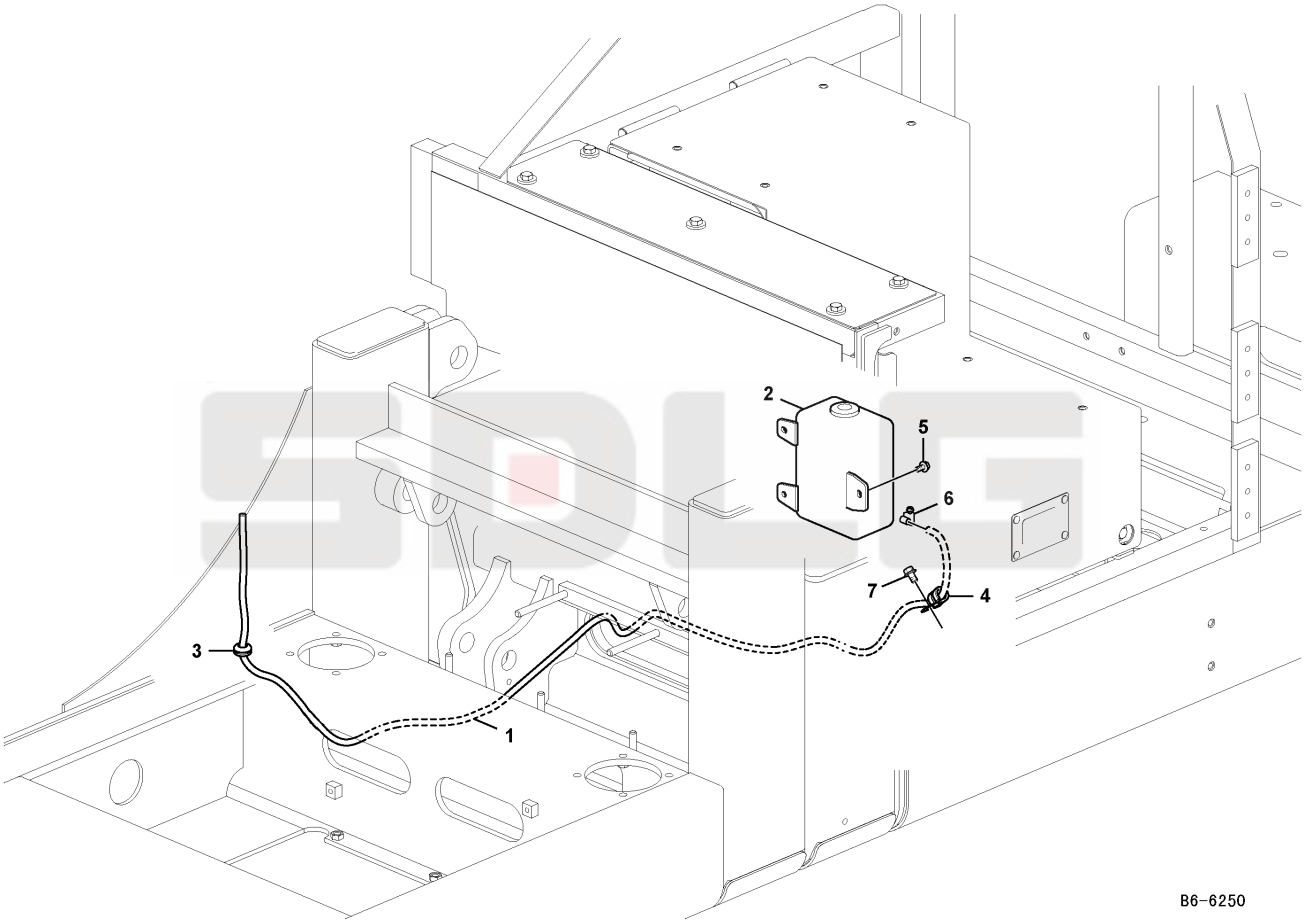

Key	Part No.	Description	Spare parts Y/N	Qty	Remarks
1	11216857	Hose	N	1	
2	11216837	Washer pump	N	1	
3	11210620	Grommet	Y	1	
4	kongbai	Kongbai	N	1	
5	kongbai	Kongbai	N	3	
6	11214818	Clamp	Y	1	
7	kongbai	Kongbai	N	1	
8	11210038	Flange screw	Y	1	
9	11215612	Washer	Y	1	

Switch

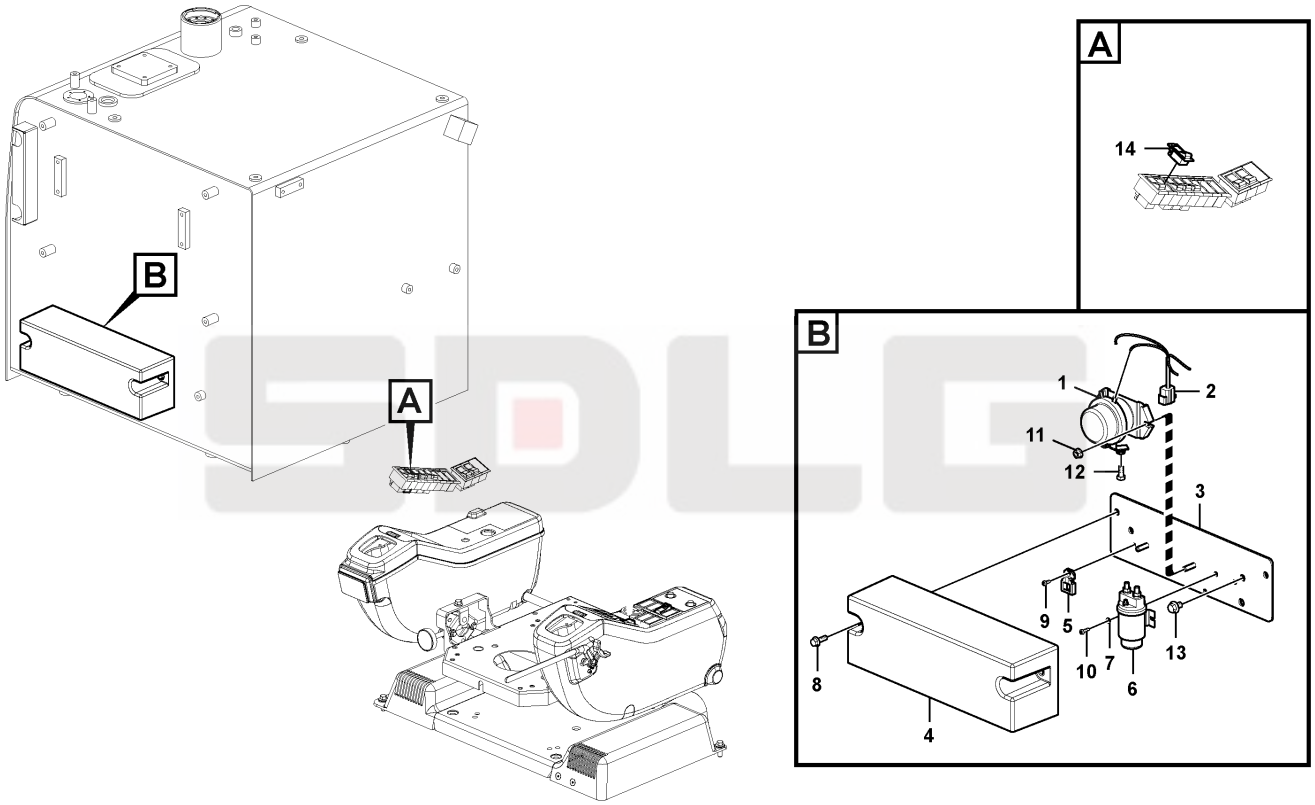

Key	Part No.	Description	Spare parts Y/N	Qty	Remarks
1	11211901	Relay	N	1	
2	11212337	Wiring harness	Y	1	
3	11215364	Bracket	N	1	
4	11214388	Cover	Y	1	
5	11212274	Bracket	Y	1	
6	11211143	Relay	Y	1	
7	11214752	Washer	N	2	
8	11214755	Screw	N	2	
9	11210084	Six point socket screw	Y	1	
10	11210085	Six point socket screw	Y	2	
11	11214754	Nut	Y	2	
12	11210118	Hexagon screw	Y	2	
13	11210036	Flange screw	Y	2	
14	11212290	Rocker switch	Y	1	
15	11214442	Relay box	N	1	

Switch

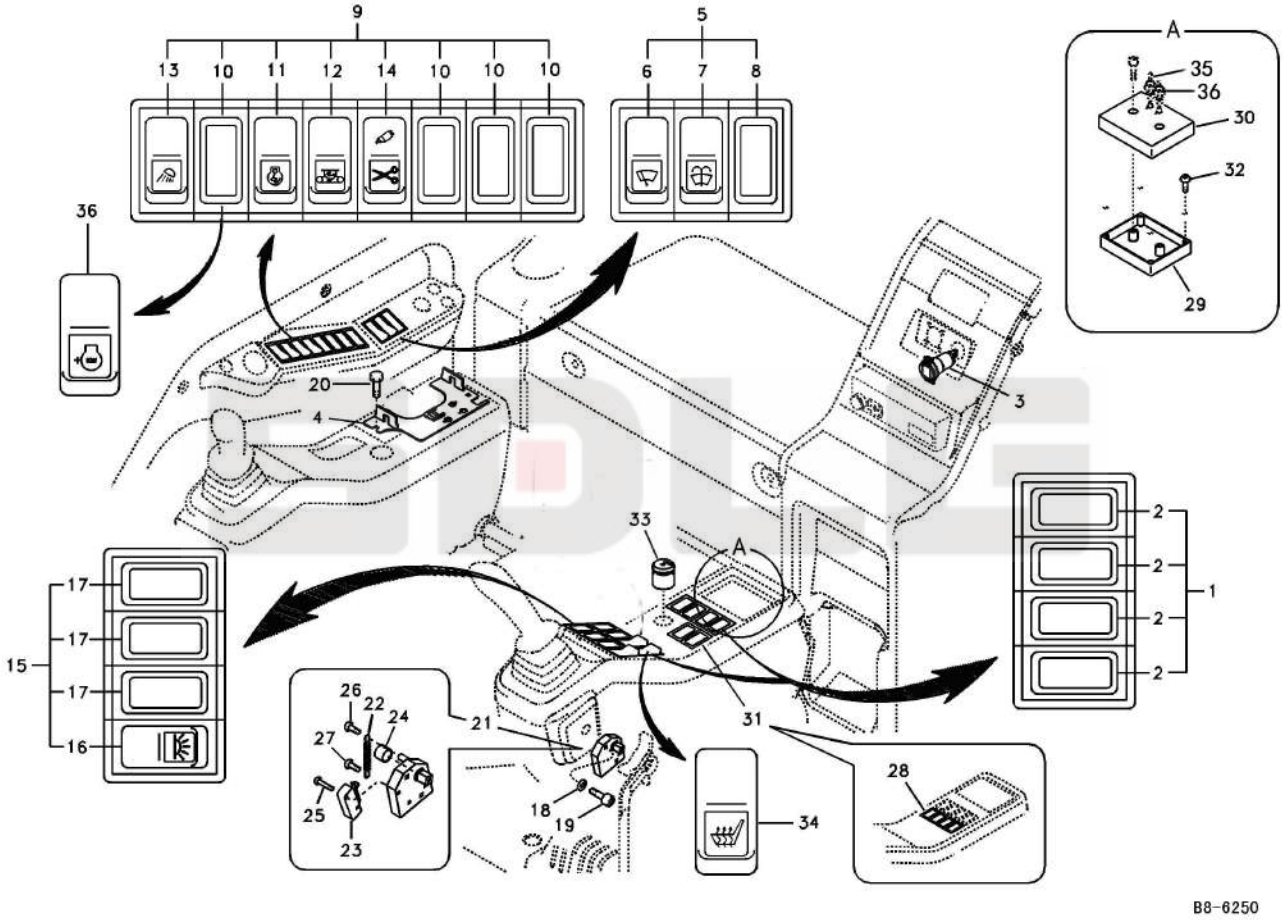
9
13
10
11
12
14
10
10
10
5
6
7
8
A
35
36
30
32
29
36
20
4
3
33
A
2
2
2
2
1
17
17
17
16
15
26
22
24
27
25
23
21
31
28
18
19
34
B8-6250

Key	Part No.	Description	Spare parts Y/N	Qty	Remarks
1	11210270	Switch	Y	2	
2	11212304	Cover	Y	4	
3	11210347	Socket	Y	1	
4	11210883	Bracket	Y	1	
5	11210756	Switch	Y	1	
6	11212292	Switch	Y	1	
7	11212312	Switch	Y	1	
8	11212304	Cover	Y	4	
9	14401709	Switch	Y	1	
10	11212304	Cover	Y	4	
11	11212306	Switch	Y	1	
12	11212315	Switch	Y	1	
13	11212307	Switch	Y	1	
14	11212293	Rocker switch	Y	1	
15	11210323	Rocker switch	Y	1	
16	11212305	Switch	Y	1	
17	11212304	Cover	Y	3	
18	11210024	Washer	Y	3	
19	11211608	Screw	Y	3	
20	11210042	Flange screw	Y	2	
21	11217726	Lock lever	Y	1	
22	11212291	Spring	Y	1	
23	11210272	Switch	N	1	
24	11210275	Bushing	Y	1	
25	11211615	Cross recessed screw	Y	2	
26	11211616	Cross recessed screw	Y	1	
27	11211618	Cross recessed screw	Y	1	
28	kongbai	Kongbai	N	1	
29	11215624	Bracket	Y	1	
30	14401470	Cover	Y	1	

Switch

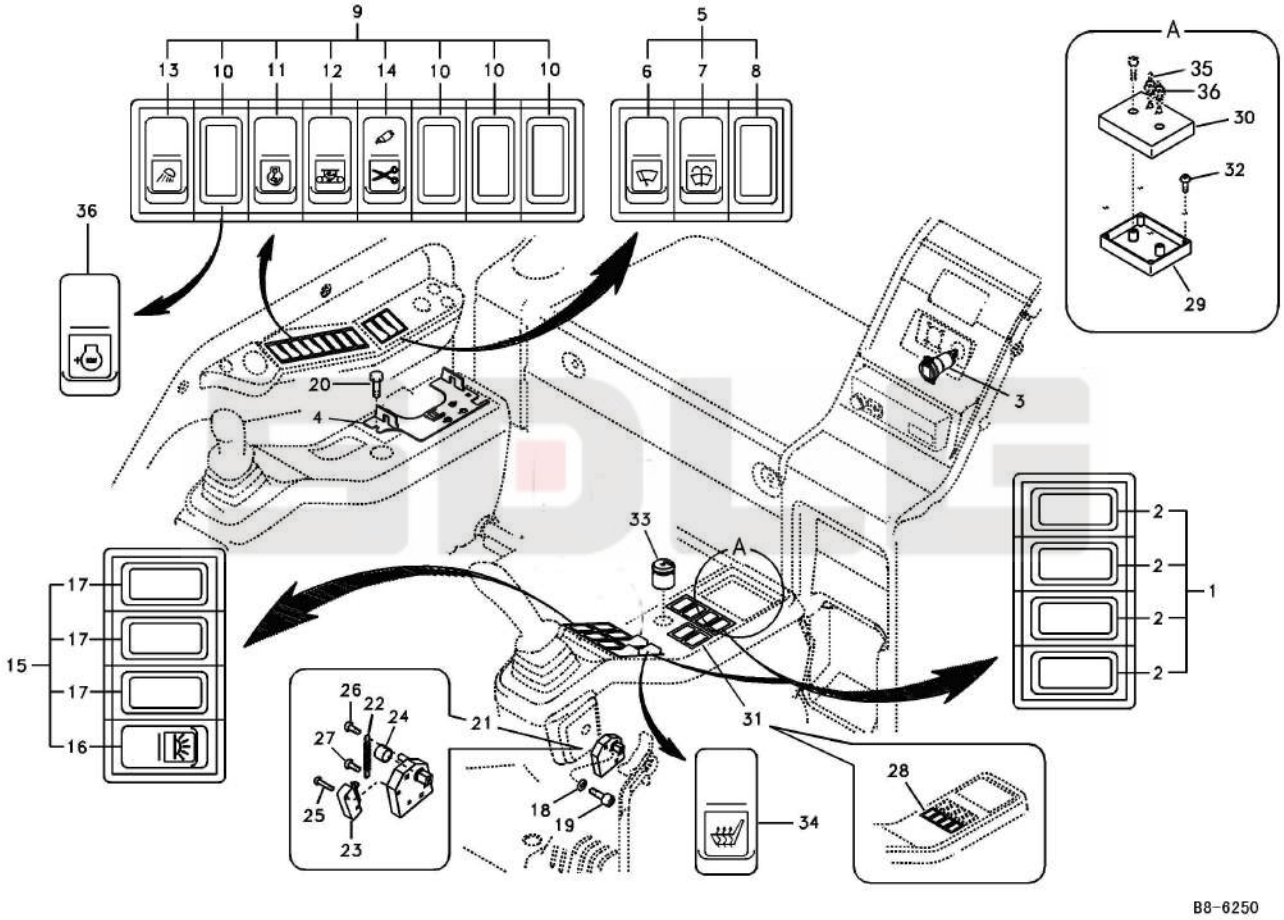
9
13
10
11
12
14
10
10
10
5
6
7
8
A
35
36
30
32
29
36
20
4
3
33
A
2
2
2
2
1
17
17
17
16
15
26
22
24
27
25
23
21
31
28
18
19
34
B8-6250

Key	Part No.	Description	Spare parts Y/N	Qty	Remarks
31	11211314	Cover	Y	1	
32	11215629	Six point socket screw	Y	4	
33	14400483	Hour recorder	N	1	
34	11212369	Weatherstrip	Y	1	
35	14400104	Switch	Y	1	
36	11219656	Screw	Y	1	

Electronic unit

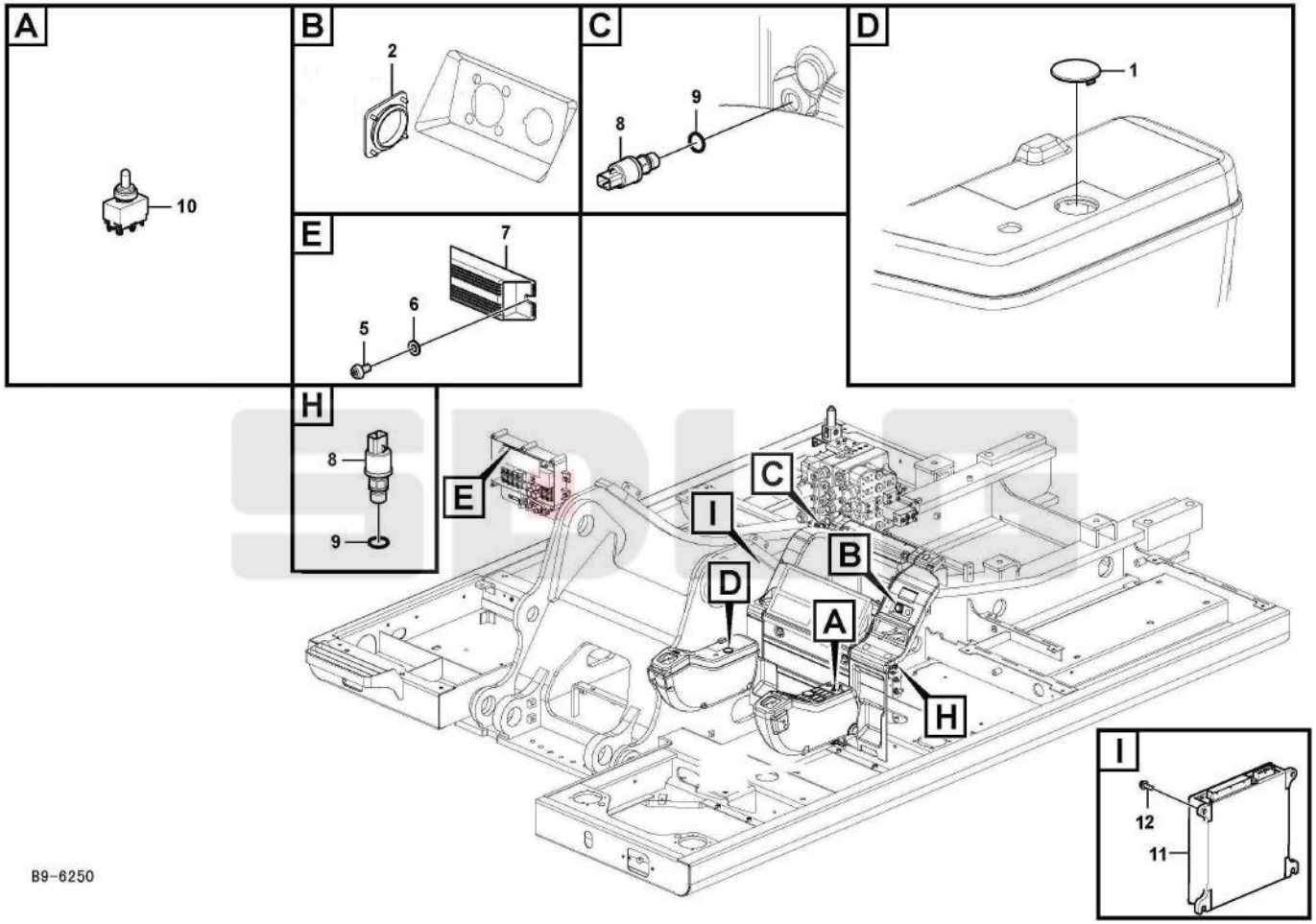

Key	Part No.	Description	Spare parts Y/N	Qty	Remarks
1	14401422	Cover	Y	1	
2	26290003101	Rubber cap	N	4	
3	kongbai	Kongbai	N	1	
4	kongbai	Kongbai	N	4	
5	11210087	Six point socket screw	Y	2	
6	11210057	Washer	Y	2	
7	11211900	Box	Y	1	
8	11210614	Switch	Y	2	
9	11210133	O-ring	Y	2	
10	kongbai	Kongbai	N	1	
11	11219502	Control unit	Y	1	
12	11214755	Screw	N	4	

Battery cable

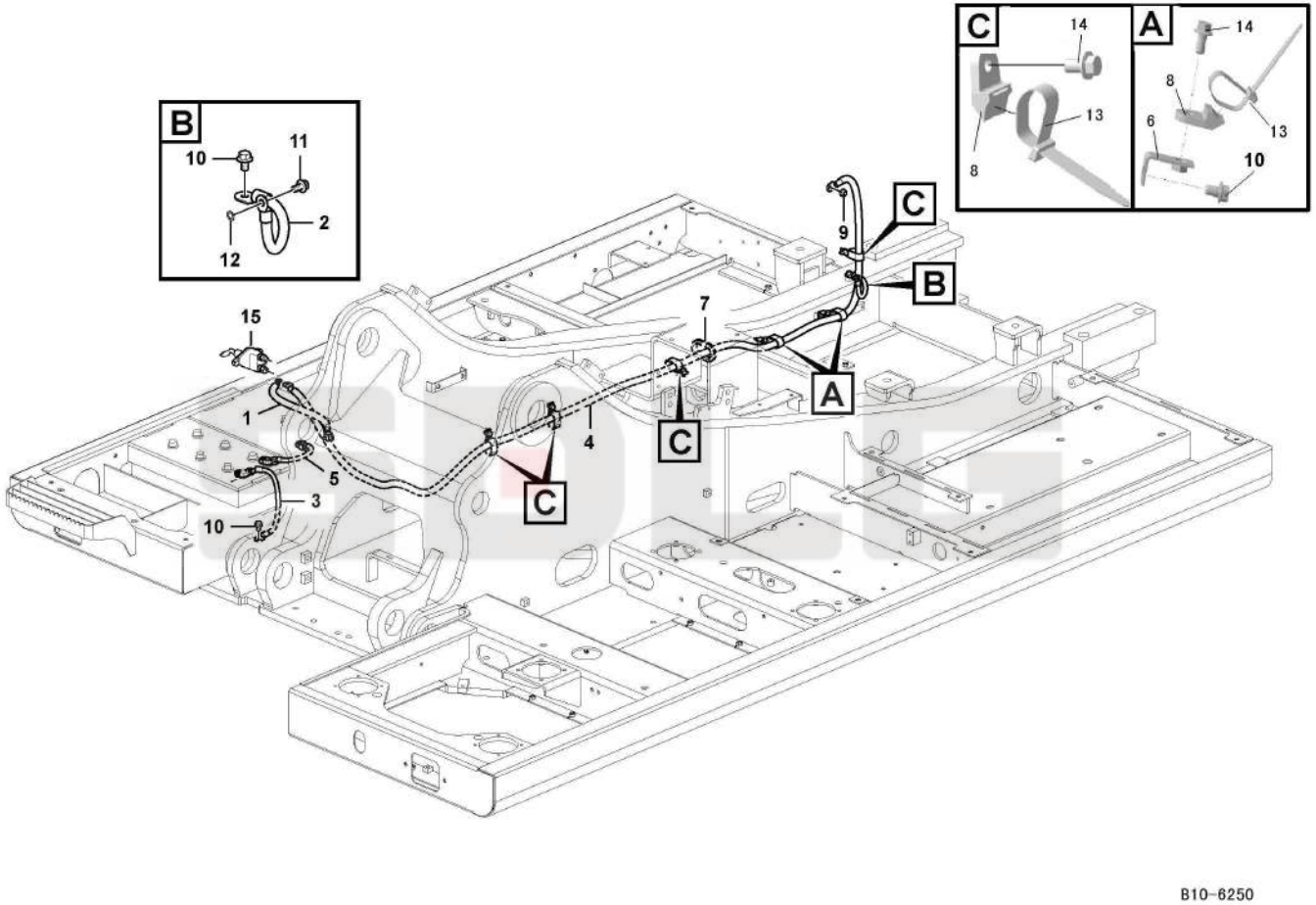

Key	Part No.	Description	Spare parts Y/N	Qty	Remarks
1	11211017	Battery cable	Y	1	
2	11212329	Battery cable	Y	1	
3	11214409	Battery cable	Y	1	
4	11212325	Battery cable	Y	1	
5	11214408	Battery cable	Y	1	
6	11210623	Bracket	Y	2	
7	11210618	Grommet	Y	1	
8	14400340	Strip clamp	Y	6	
9	11211630	Lock nut	Y	1	
10	11210036	Flange screw	Y	4	
11	11210033	Flange screw	Y	1	
12	11210025	Toothed washer	Y	1	
13	14400341	Strip clamp	Y	6	
14	11210034	Flange screw	Y	1	
15	14402051	Battery switch	N	1	

Main cable harness

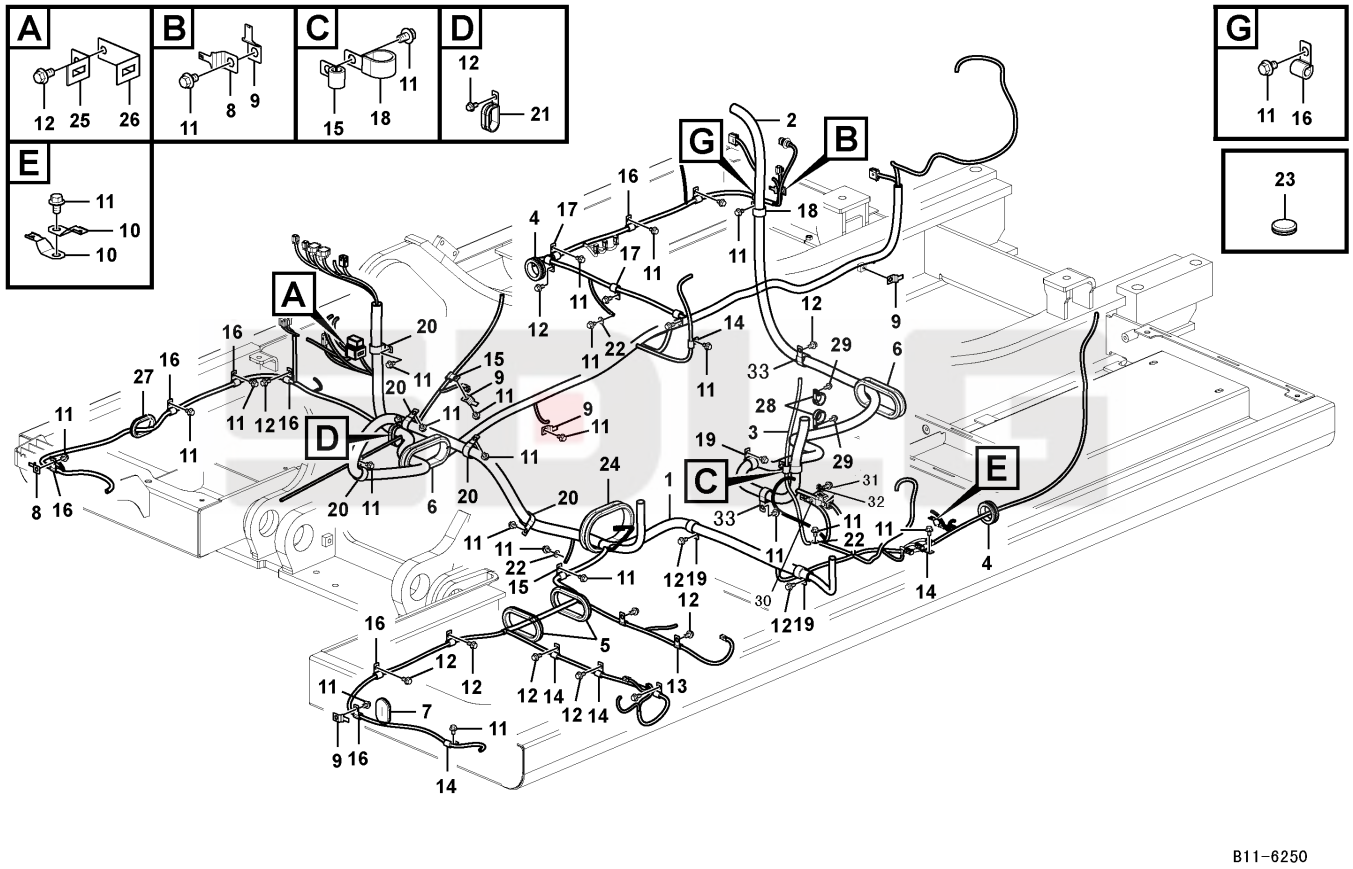

Key	Part No.	Description	Spare parts Y/N	Qty	Remarks
1	11214729	Wiring harness	Y	1	
2	kongbai	Kongbai	N	1	
3	kongbai	Kongbai	N	1	
4	11211808	Grommet	Y	2	
5	11210603	Grommet	Y	2	
6	11210398	Grommet	Y	2	
7	11210414	Grommet	Y	1	
8	11211133	Clip	Y	2	
9	11210400	Clip	Y	5	
10	11210537	Clip	Y	2	
11	11210036	Flange screw	Y	29	
12	11210034	Flange screw	Y	16	
13	11210254	Clip	Y	1	
14	11210255	Clip	Y	6	
15	11210257	Clip	Y	2	
16	11210256	Clip	Y	10	
17	11210810	Clip	Y	4	
18	11210761	Clamp	Y	2	
19	11210259	Clip	Y	3	
20	11210260	Clip	Y	5	
21	11210325	Clip	Y	1	
22	11212281	Washer	Y	3	
23	11212308	Grommet	Y	1	
24	11210408	Grommet	Y	1	
25	11210604	Bracket	Y	1	
26	11210605	Bracket	Y	1	
27	11210618	Grommet	Y	1	
28	kongbai	Kongbai	N	1	
29	kongbai	Kongbai	N	1	
30	26370003821	Seat	Y	1	

Main cable harness

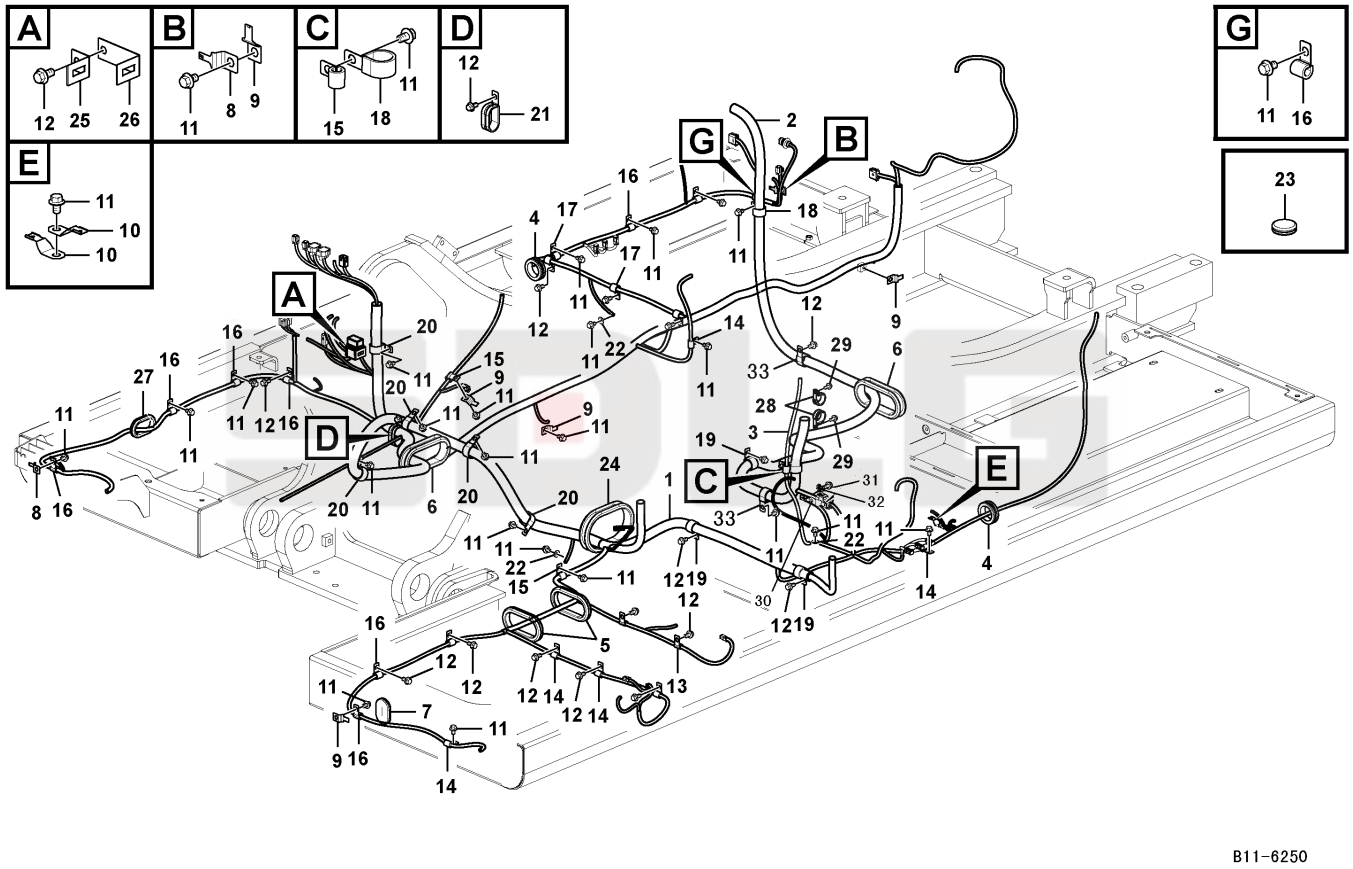

Key	Part No.	Description	Spare parts Y/N	Qty	Remarks
31	4014000267	Screw	Y	4	
32	4015000200	Washer	Y	4	
33	26370001921	Clamp	N	2	

Cable harness

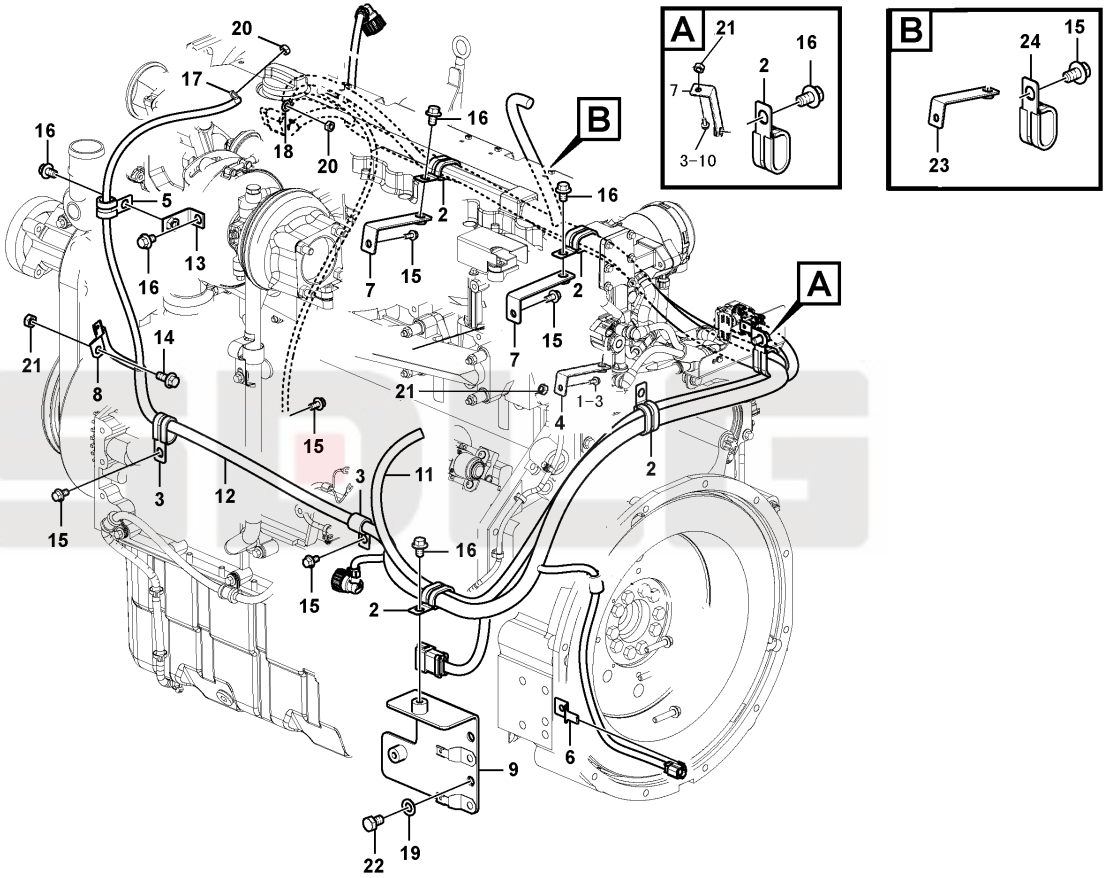

B12-6250

Key	Part No.	Description	Spare parts Y/N	Qty	Remarks
1	11210214	Hexagon screw	Y	1	
2	14400340	Strip clamp	Y	8	
3	11210064	Spring washer	Y	2	
4	11212297	Bracket	N	1	
5	14400342	Strip clamp	Y	1	
6	11210524	Clip	Y	1	
7	26370003871	Bracket	Y	3	
8	11210537	Clip	Y	2	
9	11219638	Bracket	Y	1	
10	11210034	Flange screw	Y	2	
11	11212330	Cable	N	1	
12	11218899	Wiring harness	Y	1	
13	11219637	Bracket	N	1	
14	11210032	Flange screw	Y	1	
15	11210033	Flange screw	Y	6	
16	11210036	Flange screw	Y	11	
17	kongbai	Kongbai	N	1	
18	11214768	Washer	N	1	
19	11214769	Washer	N	2	
20	11210129	Hexagon nut	Y	2	
21	11210130	Hexagon nut	Y	3	
22	11210189	Hexagon screw	Y	2	
23	26370003861	Bracket	Y	1	
24	11210761	Clamp	Y	1	

Telematics control unit

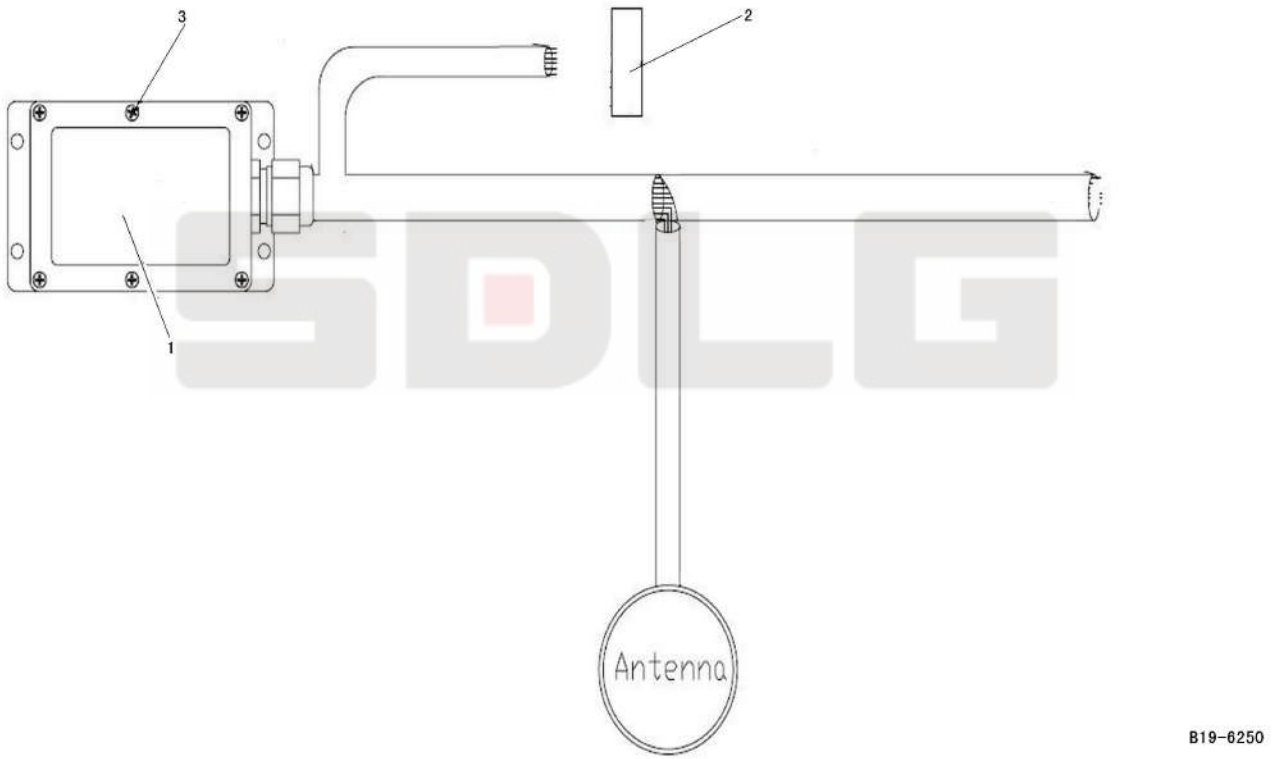

Key	Part No.	Description	Spare parts Y/N	Qty	Remarks
1	11212858	Control unit	Y	1	
1	11212858	Control unit	Y	1	
2	11212854	Keyboard	Y	1	
2	11212854	Keyboard	Y	1	
3	11212859	Attaching clamp	Y	4	
3	kongbai	Kongbai	N	4	

Cable harness

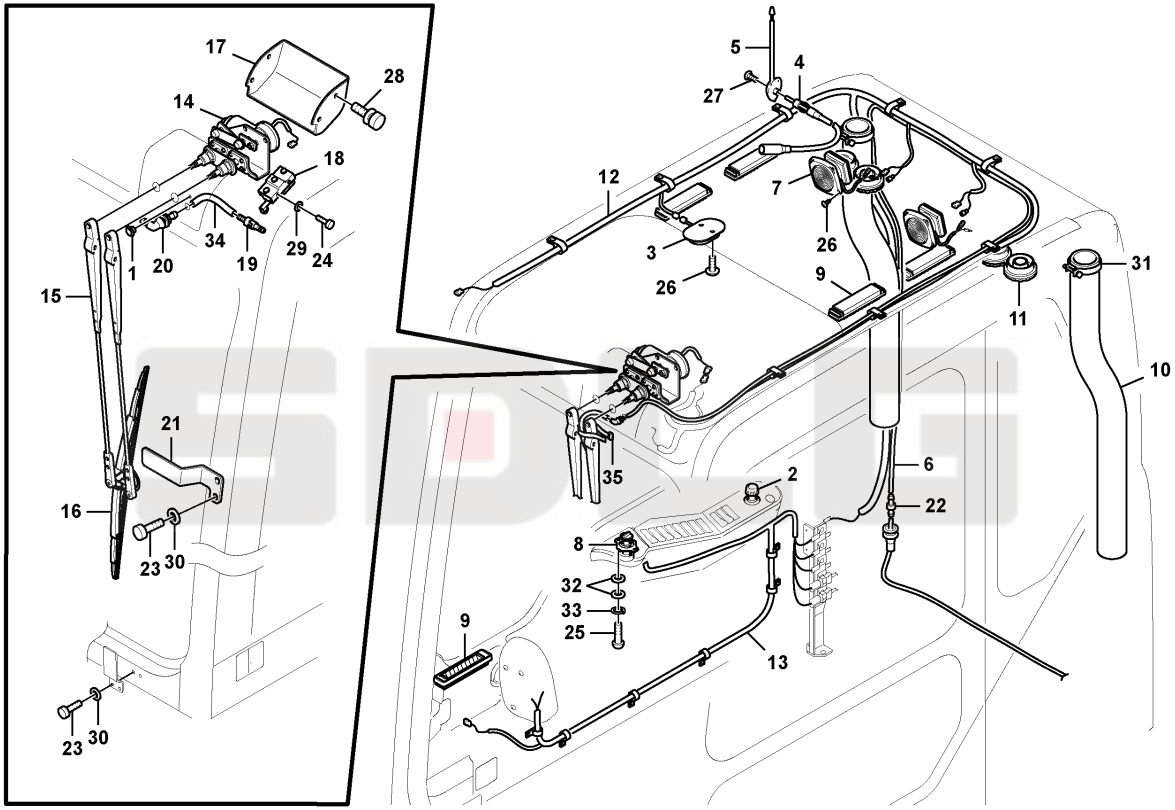

B14-6250

Key	Part No.	Description	Spare parts Y/N	Qty	Remarks
1	11210540	Cap	Y	1	
2	11215717	Cigarette lighter	N	1	
3	14400345	Interior lamp	N	1	
4	11210477	Cable	Y	2	
5	11210728	Antenna	Y	1	
6	11211050	Hose	Y	1	
7	11215642	Loudspeaker	N	2	
8	11212351	Switch	N	1	
9	11214613	Grille	Y	5	
10	11210288	Hose	Y	2	
11	11210289	Grille	N	4	
12	11210957	Wiring harness	Y	1	
13	11216213	Wiring harness	N	1	
14	11216208	Wiper motor	Y	1	
15	11216209	Wiper arm	Y	1	
16	11216211	Wiper blade	Y	1	
17	11215620	Cover	N	1	
18	11216212	Switch	Y	1	
19	11219487	Valve	Y	1	
20	11216668	Elbow	Y	1	
21	11210415	Bracket	Y	1	
22	11210622	Nipple	Y	1	
23	11210074	Flange screw	Y	4	
24	11211619	Cross recessed screw	Y	2	
25	11210083	Six point socket screw	Y	2	
26	11210085	Six point socket screw	Y	11	
27	11211620	Cross recessed screw	Y	3	
28	11211057	Bolt	Y	4	
29	11211040	Washer	Y	2	
30	11210057	Washer	Y	4	

Cable harness

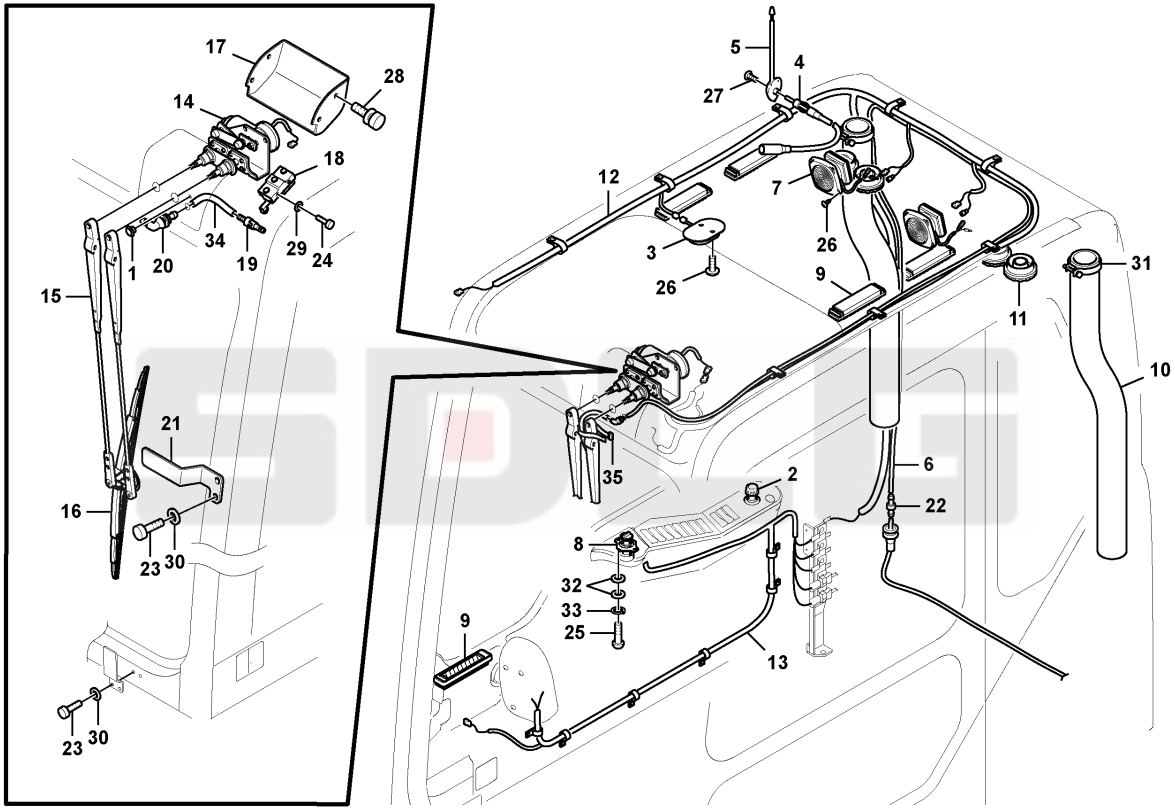

B14-6250

Key	Part No.	Description	Spare parts Y/N	Qty	Remarks
31	11211644	Clamp	N	2	
32	11214752	Washer	N	4	
33	11210061	Spring washer	Y	2	
34	11215642	Loudspeaker	N	1	
35	11214781	Clamp	Y	1	
36	11211322	Bulb	Y	2	

Relay

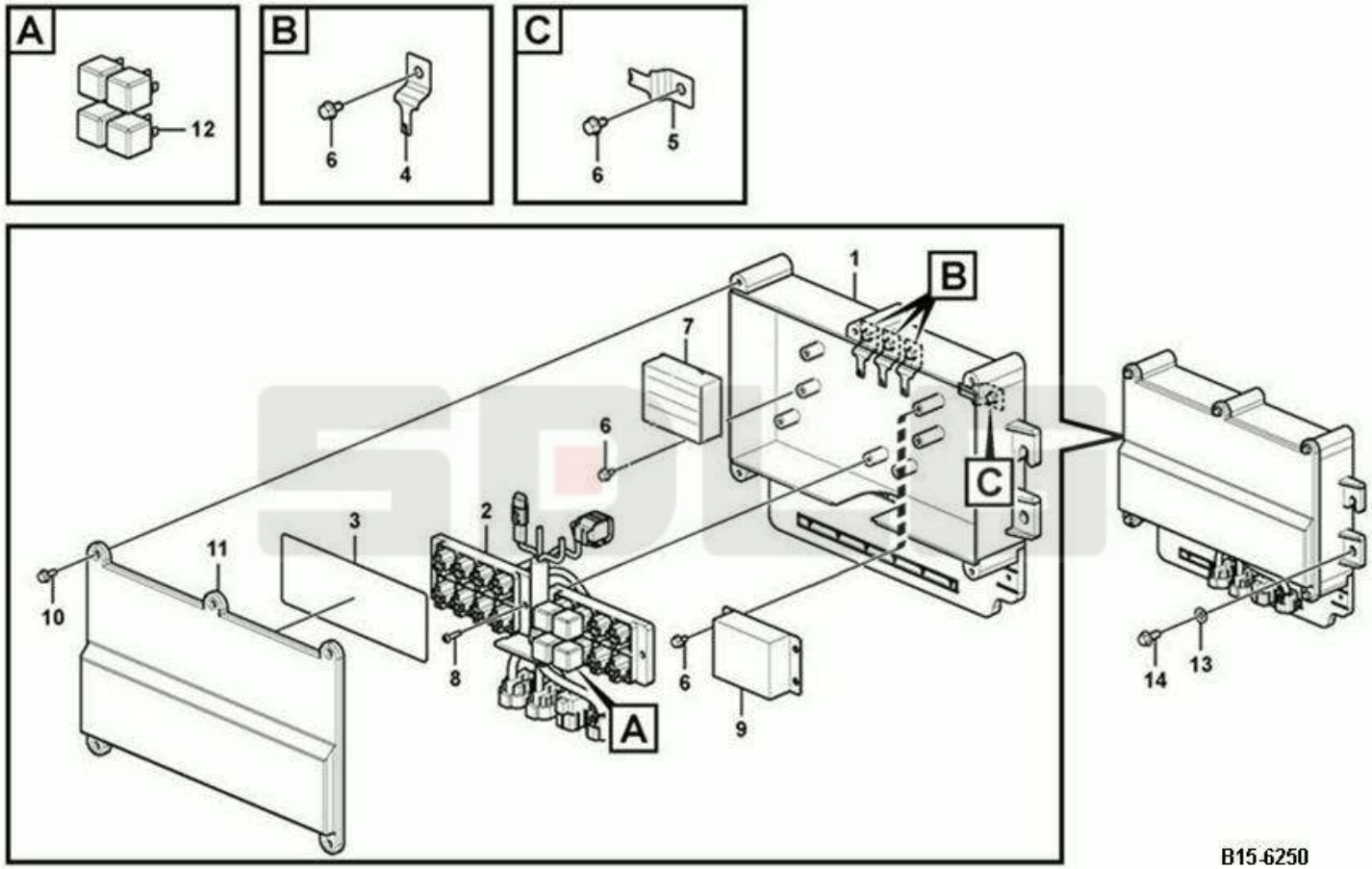

Key	Part No.	Description	Spare parts Y/N	Qty	Remarks
1	11215634	Box	N	1	
2	11217637	Wiring harness	N	1	
3	11215628	Decal	N	1	
4	11211132	Clip	Y	3	
5	11211133	Clip	Y	1	
6	11210074	Flange screw	Y	12	
7	11215636	Voltage converter	Y	1	
8	11210086	Six point socket screw	Y	4	
9	11215635	Control unit	N	1	
10	11210038	Flange screw	Y	5	
11	11211199	Cover	Y	1	
12	11215627	Relay	Y	5	
13	kongbai	Kongbai	N	4	
14	kongbai	Kongbai	N	4	
15	kongbai	Kongbai	N	1	

Sensor

Key	Part No.	Description	Spare parts Y/N	Qty	Remarks
1	14400597	Fuel level sensor	Y	1	
2	14400832	Cover	Y	1	
3	11210254	Clip	Y	1	
4	11210036	Flange screw	Y	2	
5	11210084	Six point socket screw	Y	5	
6	11210061	Spring washer	Y	5	
7	11212281	Washer	Y	2	

Instruction panel assembly

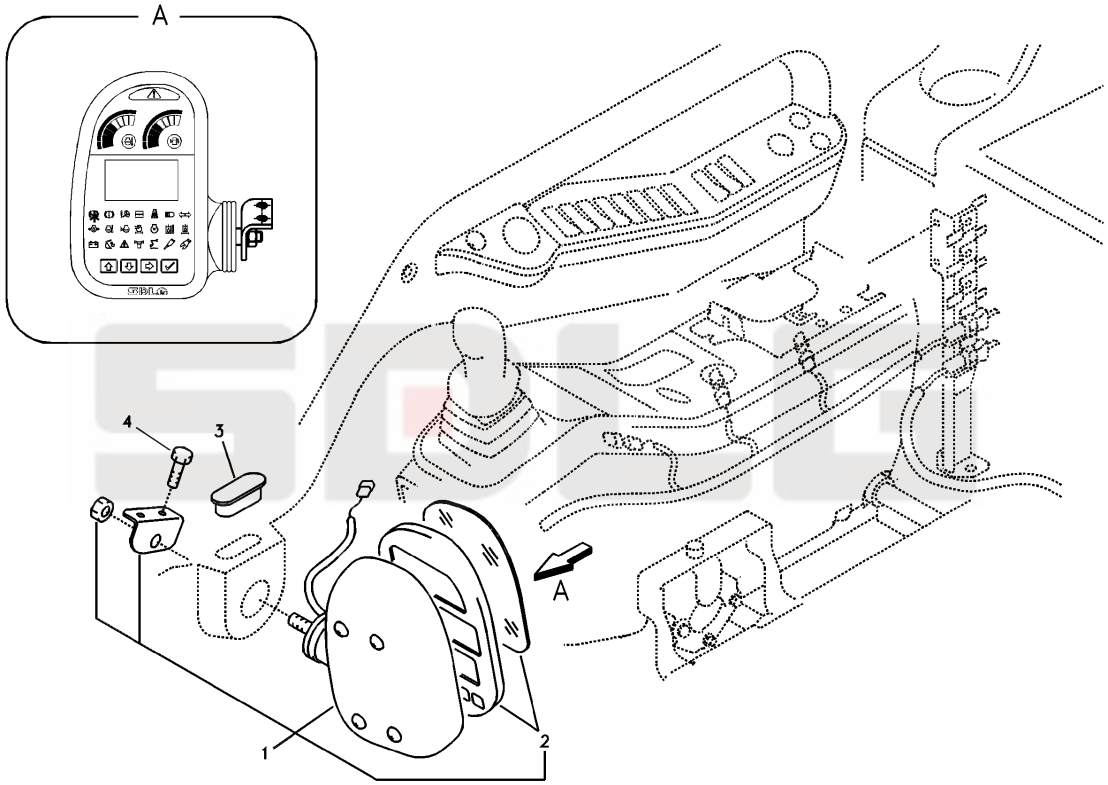

B17-6250

Key	Part No.	Description	Spare parts Y/N	Qty	Remarks
1	14401539	Display	Y	1	
2	11210778	Housing	N	1	
3	11212916	Cap	N	1	
4	11210033	Flange screw	Y	2	

Cassette radio

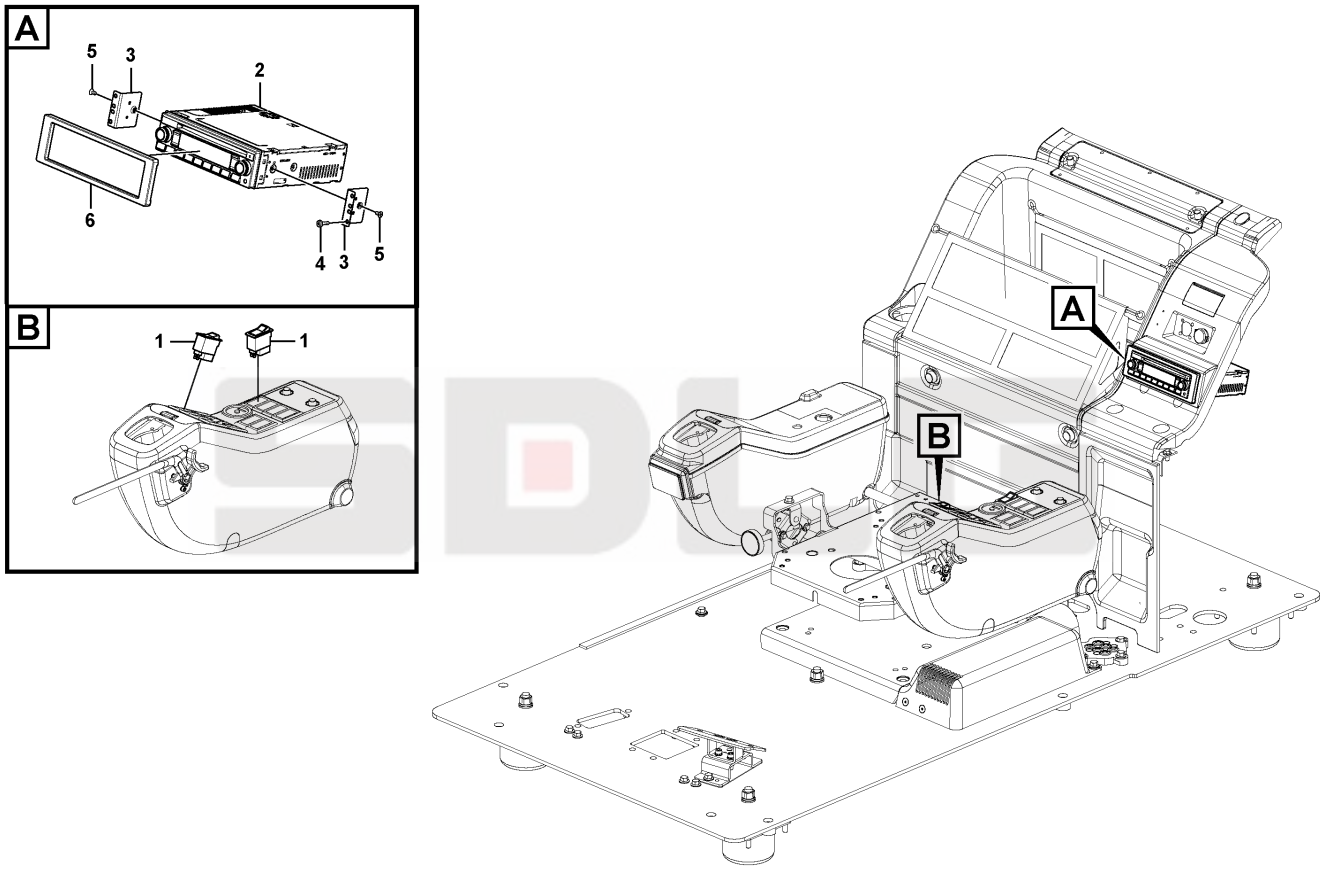

B18-6250

Key	Part No.	Description	Spare parts Y/N	Qty	Remarks
1	11210612	Switch	Y	1	
2	11217015	Radio cassette	N	1	
3	11210564	Bracket	Y	2	
4	11210089	Six point socket screw	Y	4	
5	11211622	Cross recessed screw	Y	2	
6	11210563	Cover	Y	1	

Telematics control unit

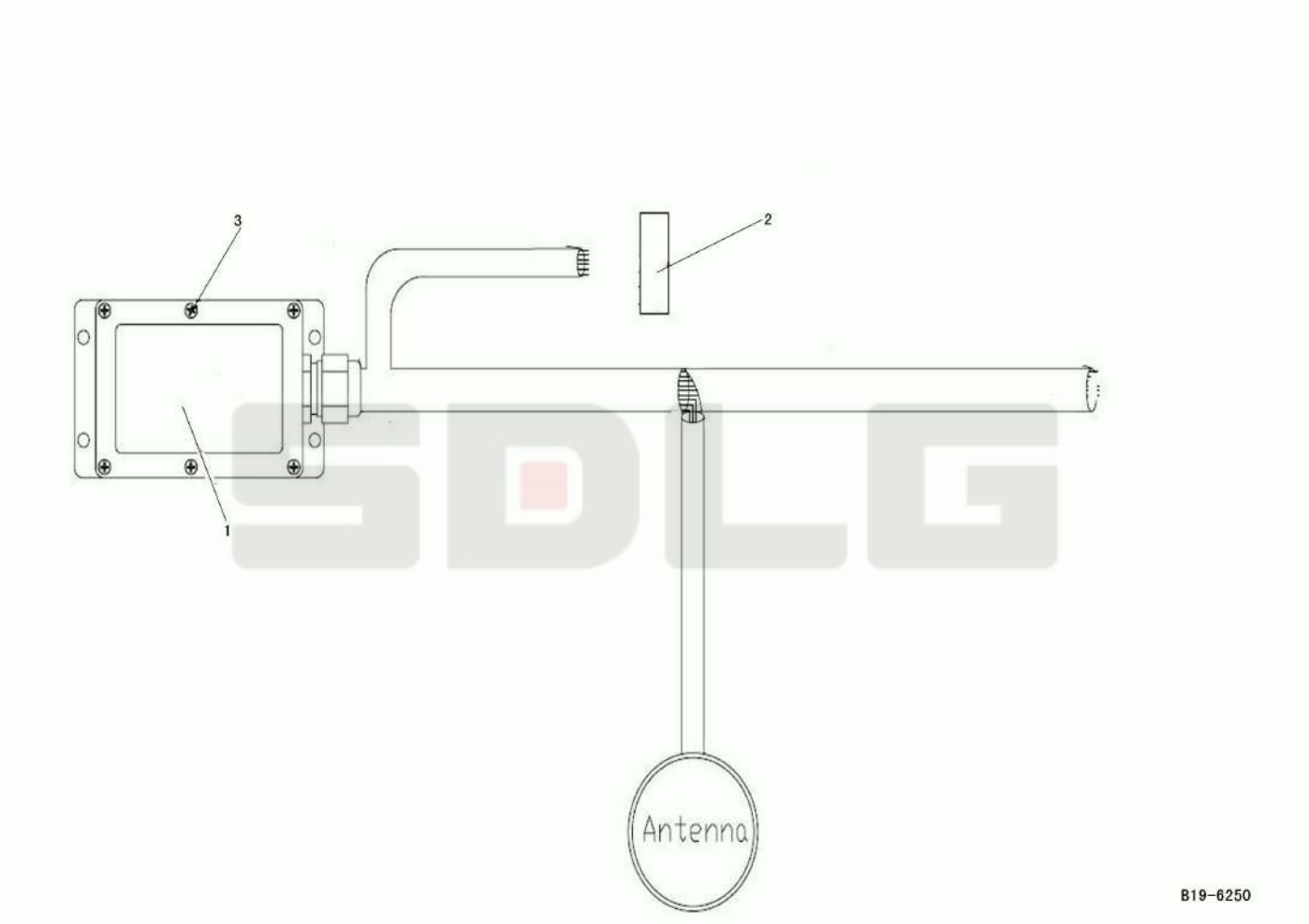

Key	Part No.	Description	Spare parts Y/N	Qty	Remarks
1	11212858	Control unit	Y	1	
1	11212858	Control unit	Y	1	
2	11212854	Keyboard	Y	1	
2	11212854	Keyboard	Y	1	
3	11212859	Attaching clamp	Y	4	
3	kongbai	Kongbai	N	4	

SDLG

C

SHANDONG LINGONG CONSTRUCTION MACHINERY CO.,LTD.

Travel gearbox

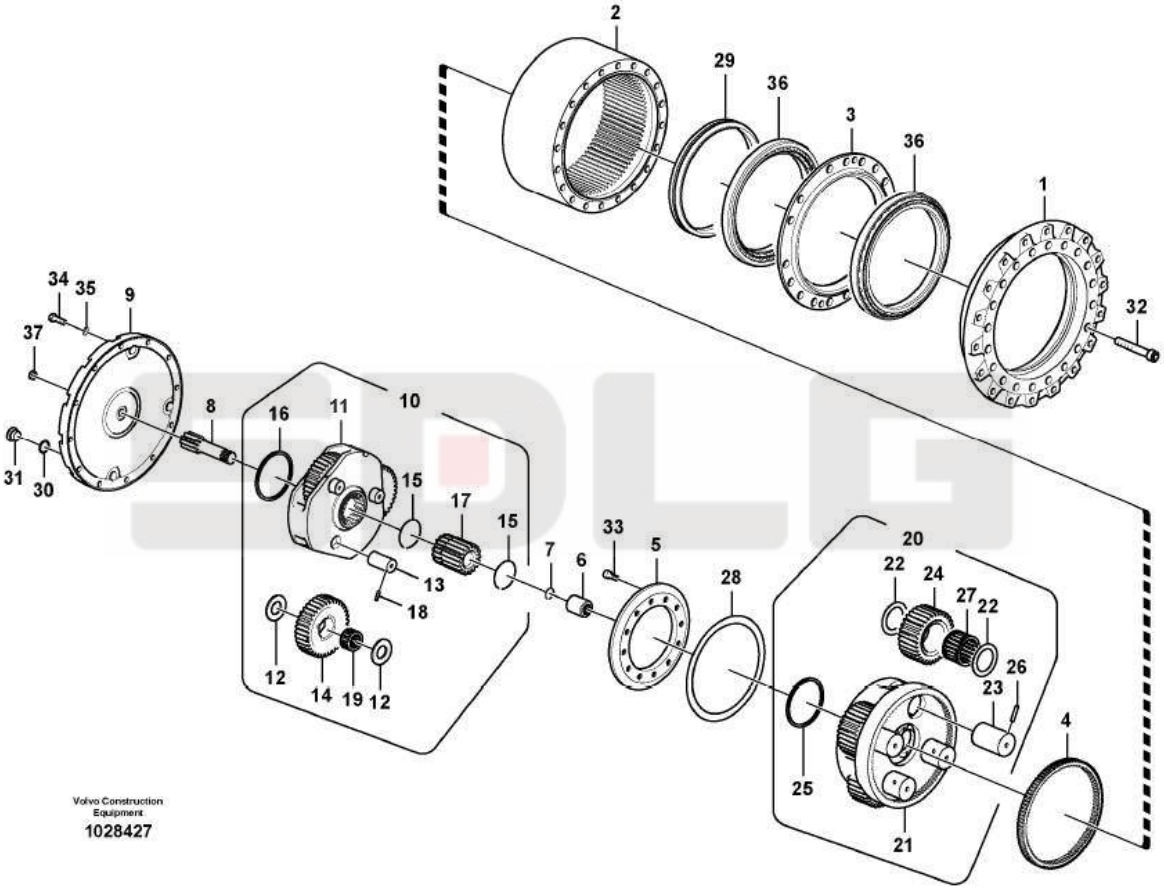

Key	Part No.	Description	Spare parts Y/N	Qty	Remarks
1	11219042	Housing	Y	1	
2	11219043	Sealing ring	Y	1	
3	11219044	Sealing ring	Y	1	
4	11219045	Bushing	Y	1	
5	11219052	Retaining ring	Y	1	
6	11219066	Bushing	Y	1	
7	11219070	Retaining ring	Y	1	
8	11219065	Sun gear	Y	1	
9	11220942	Cover	N	1	
10	11219050	Center housing	Y	1	
11	11219057	Center housing	Y	1	
12	11219062	Washer	Y	8	
13	11219063	Pin	Y	4	
14	11219061	Planet gear	Y	4	
15	11219060	Retaining ring	Y	2	
16	11219059	Washer	Y	1	
17	11219058	Sun gear	Y	1	
18	11211660	Spring pin	Y	4	
19	11211389	Needle bearing	Y	4	
20	11219051	Planet carrier	Y	1	
21	11219053	Center housing	Y	1	
22	11219055	Washer	Y	8	
23	11219056	Pin	Y	4	
24	11219054	Planet gear	Y	1	
25	11219059	Washer	Y	1	
26	11219490	Spring pin	Y	4	
27	11219068	Needle bearing	Y	4	
28	11219046	Shim	Y	1	
29	11216870	Sealing	Y	1	
30	11210141	O-ring	Y	3	

Travel gearbox

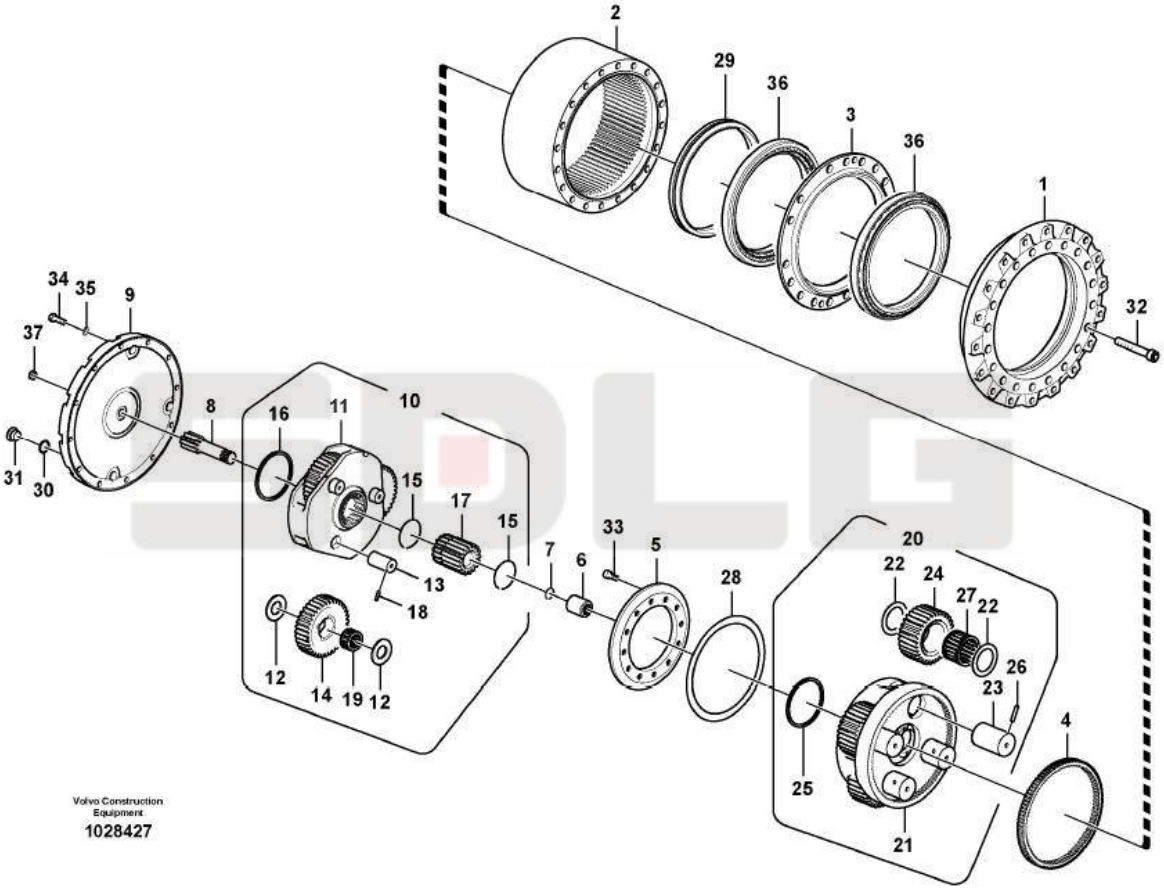

Key	Part No.	Description	Spare parts Y/N	Qty	Remarks
31	11211702	Plug	N	3	
32	11219049	Screw	Y	20	
33	11219489	Screw	Y	12	
34	11210099	Hexagon screw	Y	12	
35	11210065	Spring washer	Y	12	
36	11219041	Bearing	Y	2	
37	11211372	Pad	Y	1	

Swing gearbox

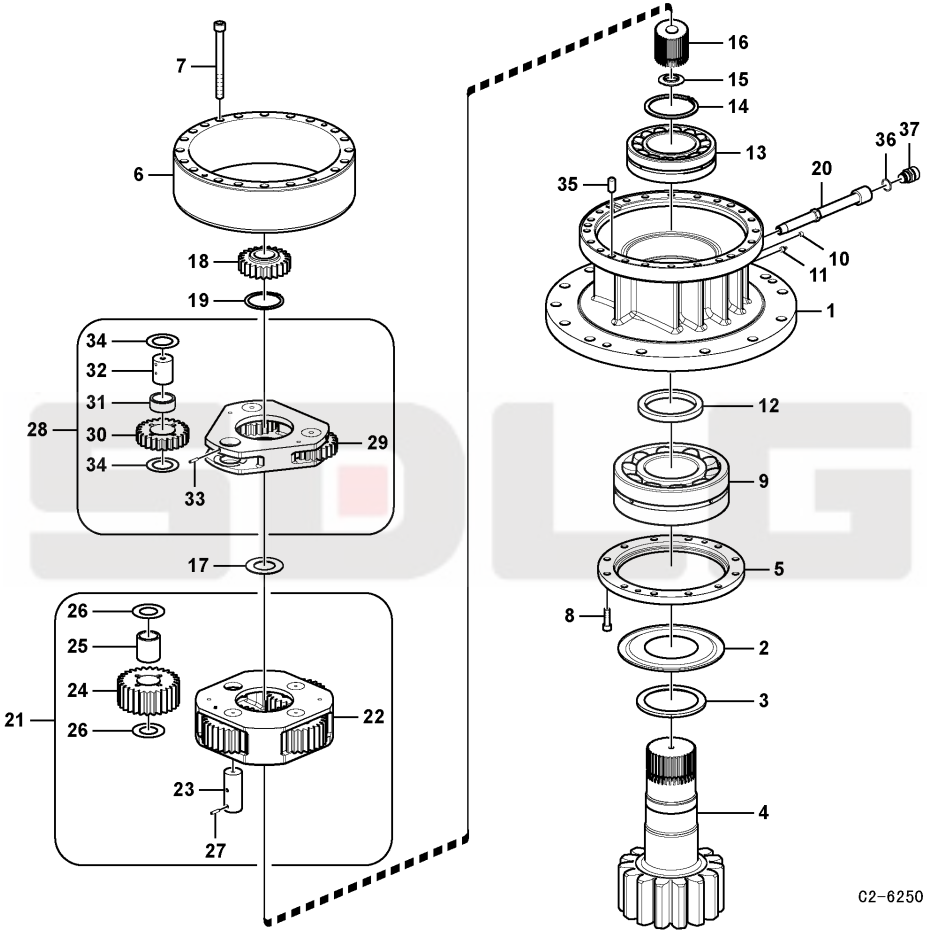

Key	Part No.	Description	Spare parts Y/N	Qty	Remarks
1	kongbai	Kongbai	N	1	
2	11212192	Ring	Y	1	
3	11212193	Collar	Y	1	
4	11212194	Shaft	Y	1	
5	11212195	Cover	Y	1	
6	11212196	Gear	Y	1	
7	11212197	Hex. socket screw	Y	16	
8	11210153	Hex. socket screw	Y	12	
9	11212198	Bearing	Y	1	
10	11212199	Plug	Y	1	
11	11210001	Lubricating nipple	N	1	
12	11212200	Sealing	Y	1	
13	11212201	Bearing	Y	1	
14	11214813	Retaining ring	Y	1	
15	11211404	Thrust ring	Y	1	
16	11212203	Gear	Y	1	
17	11212204	Ring	Y	1	
18	11212205	Gear	Y	1	
19	11212206	Spacer ring	Y	1	
20	11210769	Pipe	Y	1	
21	11212207	Planet carrier	Y	1	
22	11219903	Planet carrier	Y	1	
24	11212208	Pin	Y	4	
25	11212209	Gear	Y	4	
26	11212210	Bushing	Y	4	
27	11212211	Washer	Y	8	
28	11211660	Spring pin	Y	4	
29	11212212	Planet carrier	Y	1	
30	11219904	Planet carrier	Y	1	
31	11212213	Gear	Y	3	

Swing gearbox

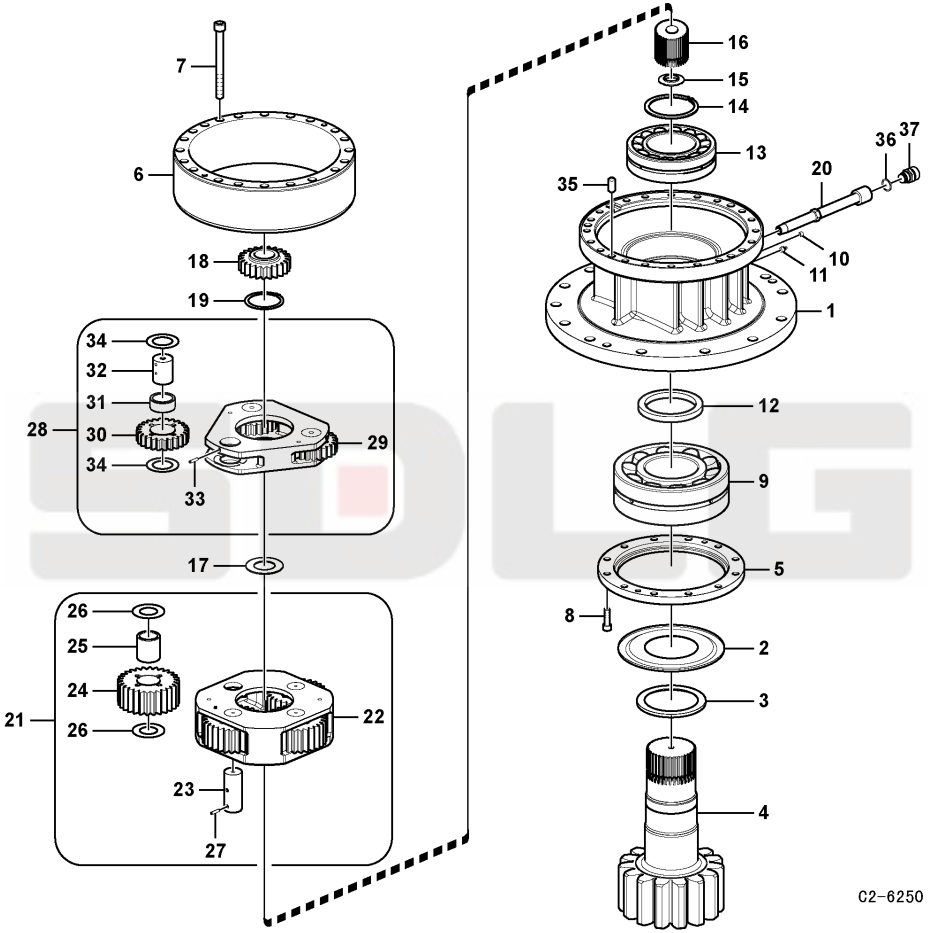

Key	Part No.	Description	Spare parts Y/N	Qty	Remarks
32	11212214	Bearing	Y	3	
33	11212215	Pin	Y	3	
34	11211660	Spring pin	Y	3	
35	11212211	Washer	Y	6	
36	11214067	Pin	Y	1	
37	11210052	Gasket	Y	1	
38	11210523	Valve	N	1	
39	11212216	Swing gearbox	Y	1	

Pump gearbox

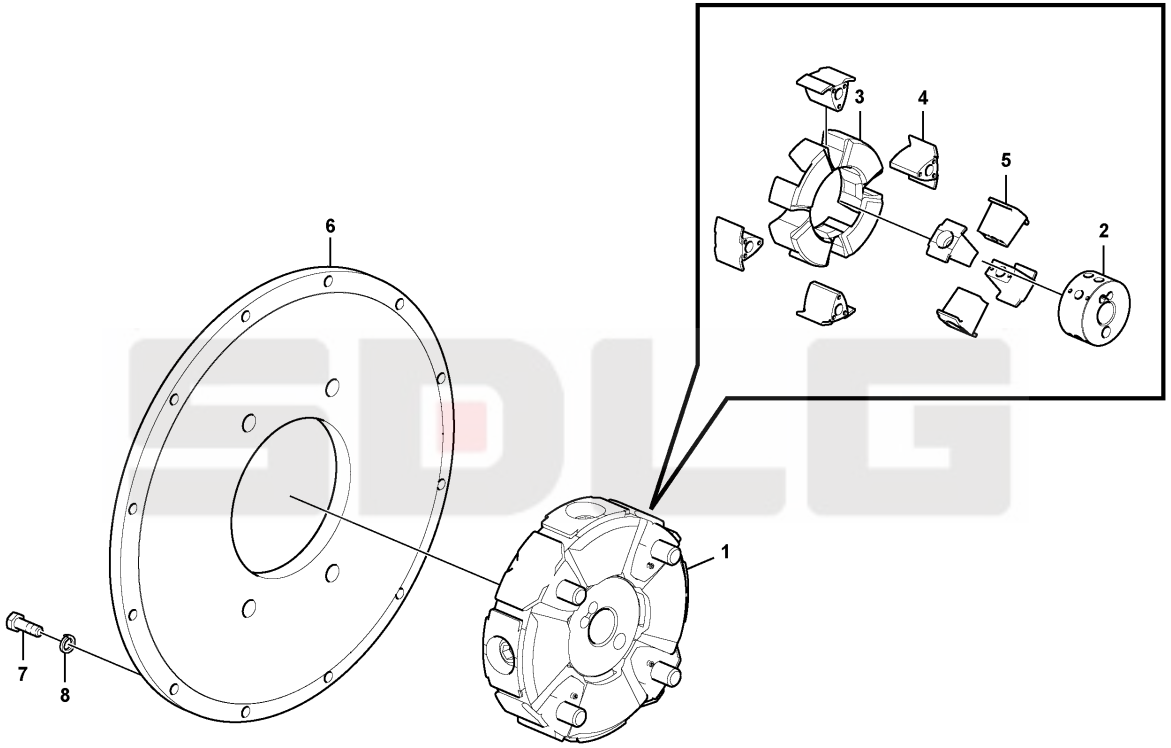

C3-6250

Key	Part No.	Description	Spare parts Y/N	Qty	Remarks
1	11210479	Elastic coupling	Y	1	
2	11210481	Hub	Y	1	
3	11210480	Elastic coupling	Y	1	
4	11210482	Insert	Y	4	
5	11210483	Insert	Y	4	
6	11212217	Flange	Y	1	
7	11210214	Hexagon screw	Y	8	
8	11210064	Spring washer	Y	8	

Travel motor assembly

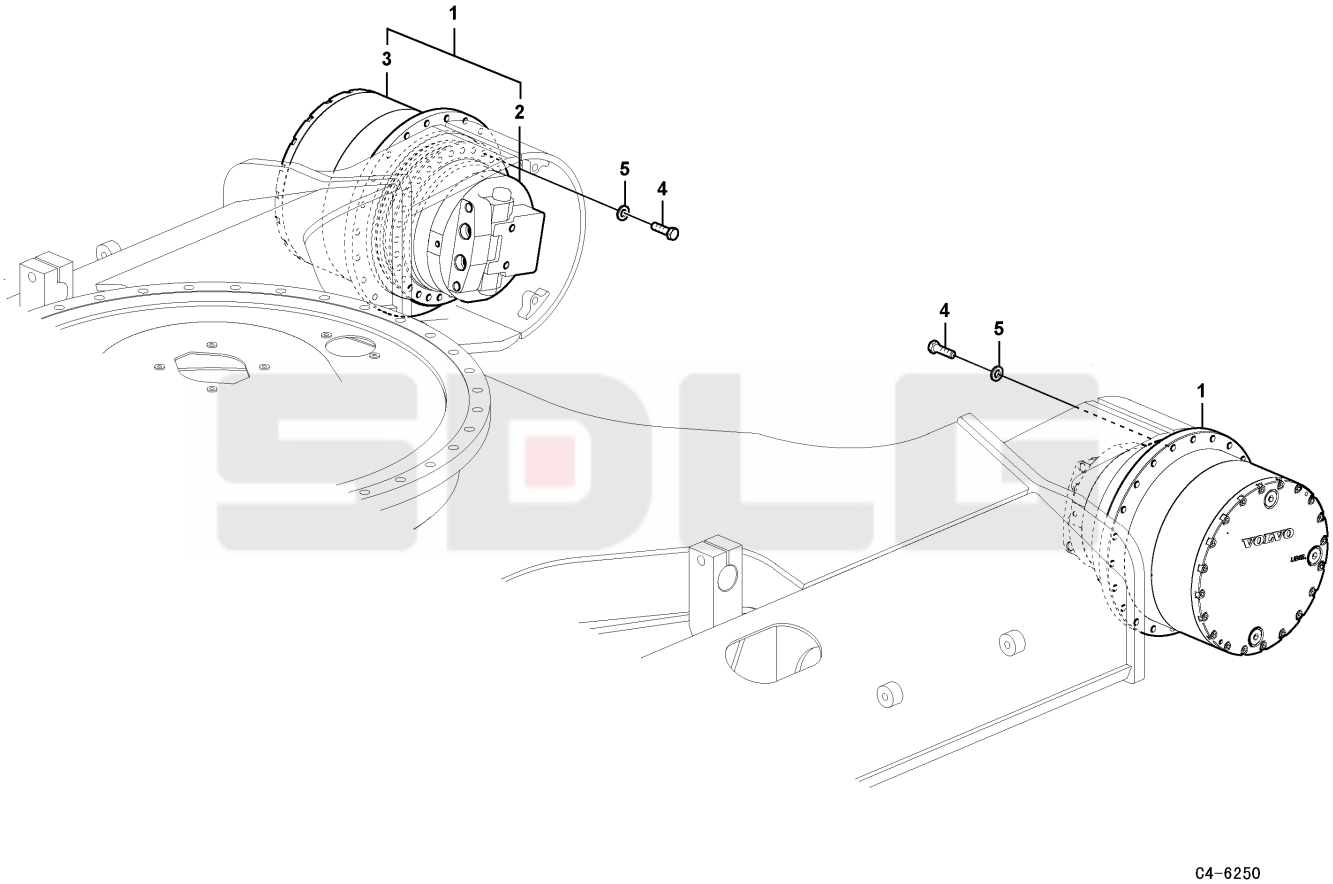

Key	Part No.	Description	Spare parts Y/N	Qty	Remarks
1	11212142	Drive unit	N	2	
2	11211880	Travel motor	Y	1	
3	kongbai	Kongbai	N	1	
4	11210207	Screw	Y	60	
5	kongbai	Kongbai	N	60	

Travel motor assembly

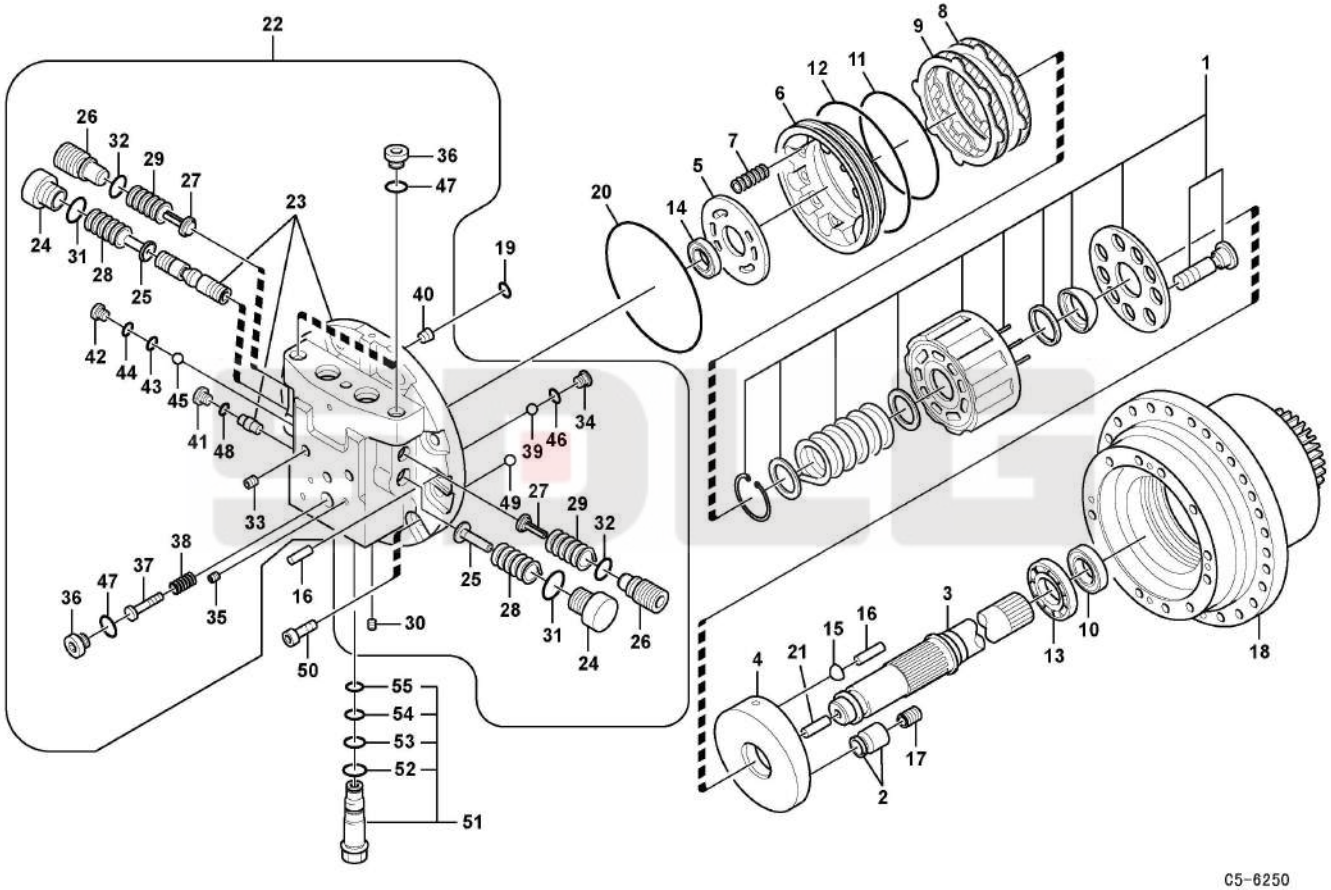

Key	Part No.	Description	Spare parts Y/N	Qty	Remarks
1	11219905	Cylinder	Y	1	
2	11211498	Piston	Y	1	
3	11219906	Shaft	Y	1	
4	11211520	Protecting plate	Y	1	
5	11211523	Protecting plate	Y	1	
6	11211531	Piston	Y	1	
7	11211532	Spring	Y	12	
8	11211533	Friction plate	Y	2	
9	11211477	Friction plate	Y	2	
10	11219898	Sealing ring	Y	1	
11	11210183	O-ring	Y	1	
12	11210184	O-ring	Y	1	
13	11210836	Ball bearing	Y	1	
14	11214790	Ball bearing	Y	1	
15	11219911	Support	Y	2	
16	11211528	Pin	Y	4	
17	11211499	Spring	Y	1	
18	11219912	Spindle	Y	1	
19	11210131	O-ring	Y	2	
20	11219913	O-ring	Y	1	
21	11219914	Pin	Y	1	
22	11219915	Flange	Y	1	
23	kongbai	Kongbai	N	1	
24	11211475	Plug	Y	2	
25	11211534	Spring seat	Y	2	
26	11211478	Plug	Y	2	
27	11211479	Valve	N	2	
28	11211476	Spring	Y	2	
29	11211480	Spring	Y	2	
30	11219916	Plug	N	4	

Travel motor assembly

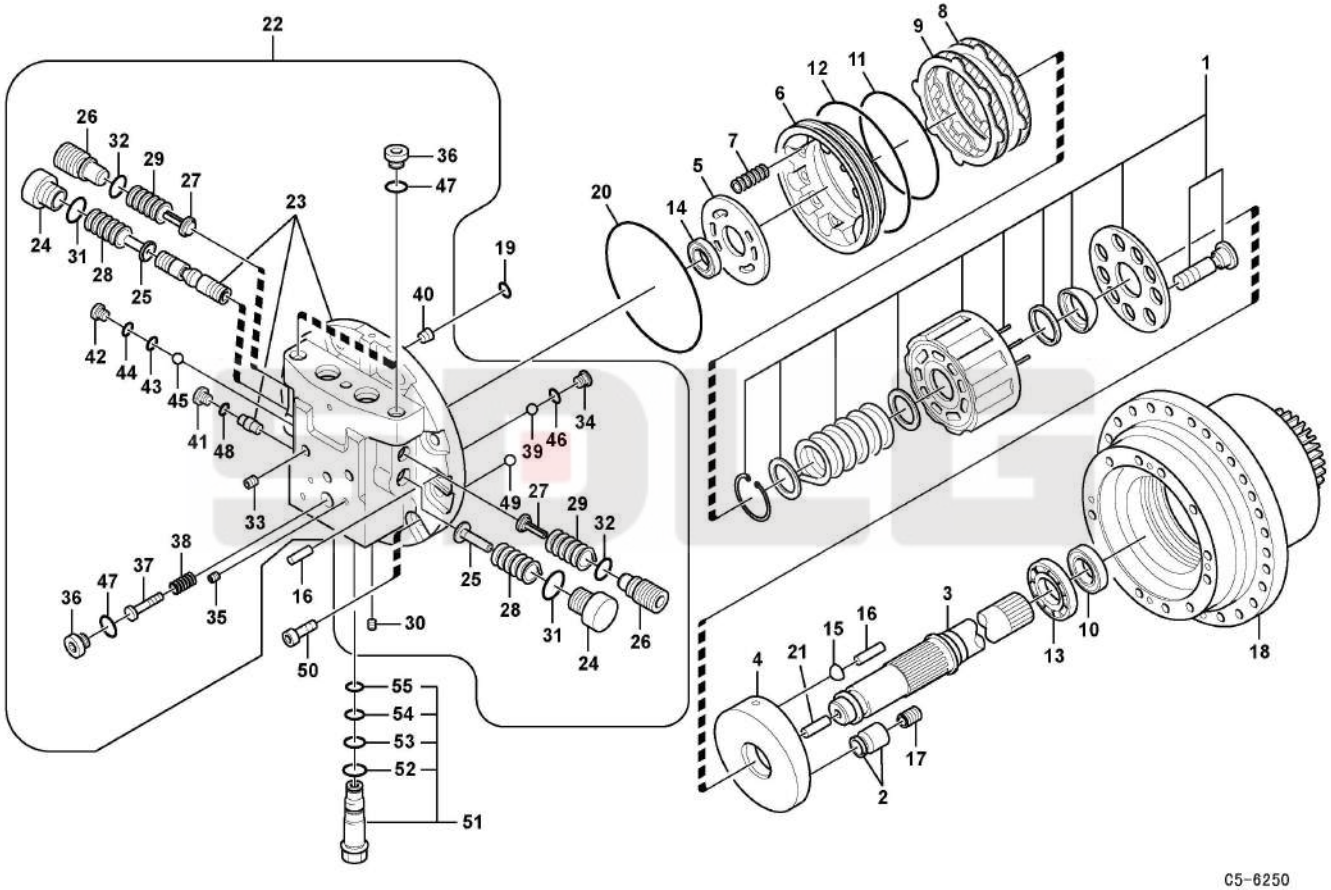

Key	Part No.	Description	Spare parts Y/N	Qty	Remarks
31	11210174	O-ring	Y	2	
32	11210139	O-ring	Y	2	
33	11219907	Plug	N	2	
34	11213586	Plug	Y	2	
35	11220142	Plug	Y	8	
36	11213584	Plug	Y	2	
37	11221026	Slide	Y	1	
38	11213582	Spring	Y	1	
39	11211807	Ball	Y	2	
40	11214802	Filter	Y	1	
41	11213575	Plug	Y	2	
42	11211537	Plug	Y	2	
43	11210165	O-ring	Y	2	
44	11210131	O-ring	Y	2	
45	11219909	Support	Y	2	
46	11210133	O-ring	Y	2	
47	11210166	O-ring	Y	2	
48	11210135	O-ring	Y	2	
49	11210739	Tube fitting	Y	1	
50	11219917	Screw	N	12	
51	11219910	Relief valve	N	2	
52	11210136	O-ring	Y	1	
53	11210139	O-ring	Y	1	
54	11210144	O-ring	Y	1	
55	11210166	O-ring	Y	1	
56	11219918	Sealing kit	Y	1	
57	11211880	Travel motor	Y	1	

Swing motor

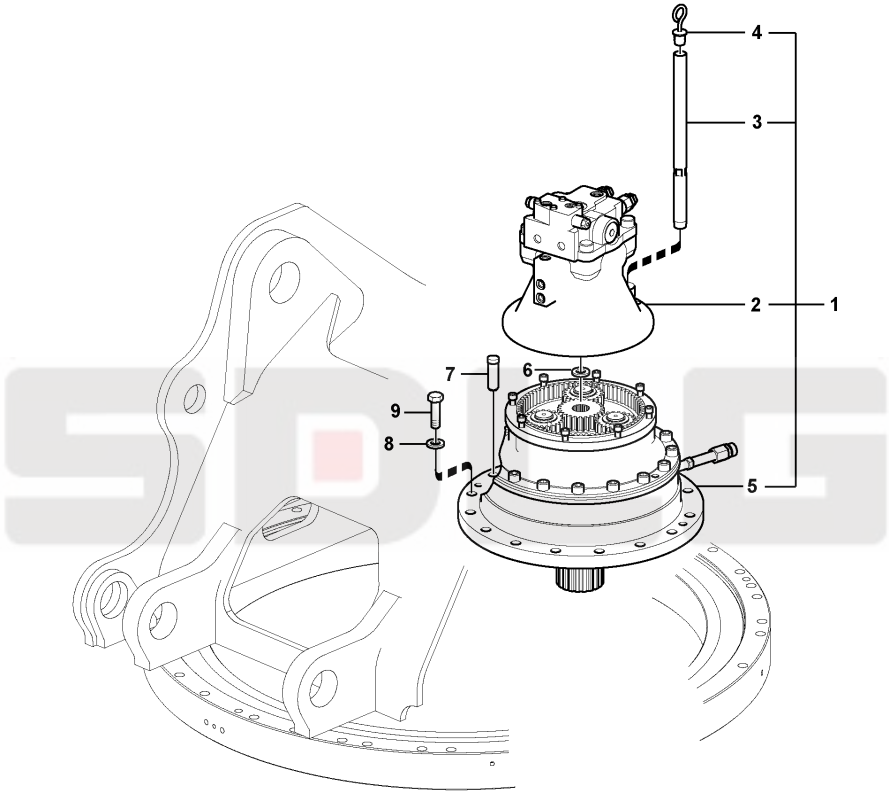

C6-6250

Key	Part No.	Description	Spare parts Y/N	Qty	Remarks
1	kongbai	Kongbai	N	1	
2	11211879	Swing motor	Y	1	
3	11212218	Pipe	Y	1	
4	11212219	Gauge	Y	1	
5	11212216	Swing gearbox	Y	1	
6	11212220	Sealing ring	N	1	
7	11210669	Pin	Y	1	
8	11210200	Plain washer	Y	14	
9	11210108	Hexagon screw	Y	14	

Swing motor

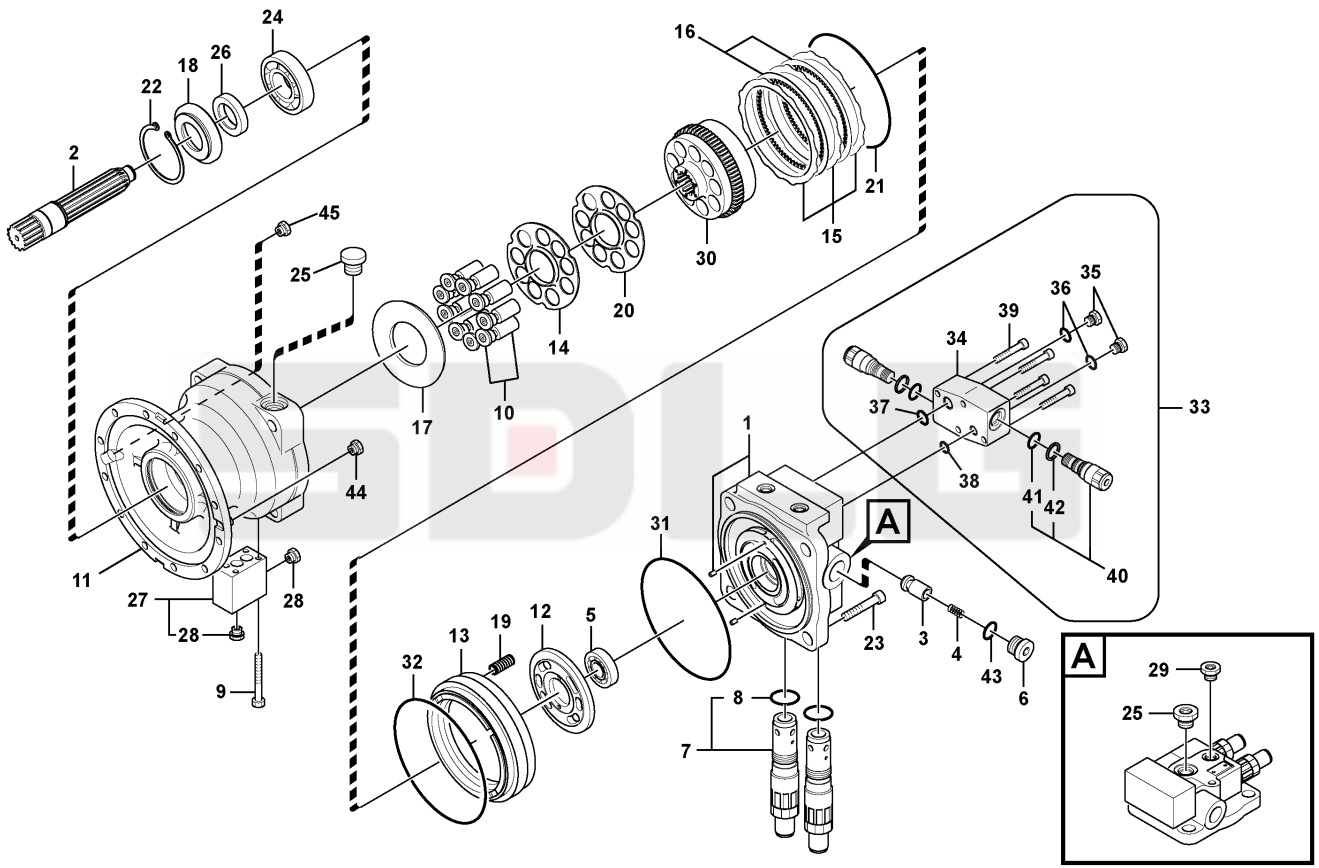
24
26
18
22
2
16
21
15
30
20
14
10
17
45
25
44
11
27
28
28
9
31
1
A
23
3
4
43
6
5
12
19
13
32
8
7
33
34
39
36
35
37
38
41
42
40
A
29
25
C7-6250

Key	Part No.	Description	Spare parts Y/N	Qty	Remarks
1	11212221	Casing	Y	1	
2	11212222	Shaft	Y	1	
3	11212223	Control plunger	Y	2	
4	11212224	Spring	Y	2	
5	11212225	Roller bearing	Y	1	
6	11212226	Plug	Y	2	
7	11210508	Relief valve	Y	2	
8	11210170	O-ring	Y	1	
9	11210416	Screw	Y	3	
10	11212227	Piston	Y	9	
11	kongbai	Kongbai	N	1	
12	11212228	Plate	Y	1	
13	11212413	Piston	Y	1	
14	11212426	Plate	Y	1	
15	11212419	Plate	Y	3	
16	11212420	Plate	Y	2	
17	11212425	Plate	Y	1	
18	11212424	Cover	Y	3	
19	11212421	Spring	Y	20	
20	11212427	Spring	Y	1	
21	11212436	O-ring	N	1	
22	11212423	Ring	Y	1	
23	11211547	Bolt	Y	4	
24	11212422	Roller bearing	Y	1	
25	11212418	Plug	Y	3	
26	11212412	Sealing	Y	1	
27	11210827	Valve	Y	1	
28	11212417	Plug	Y	2	
29	11212429	Plug	Y	1	
30	11212428	Cylinder	Y	1	

Swing motor

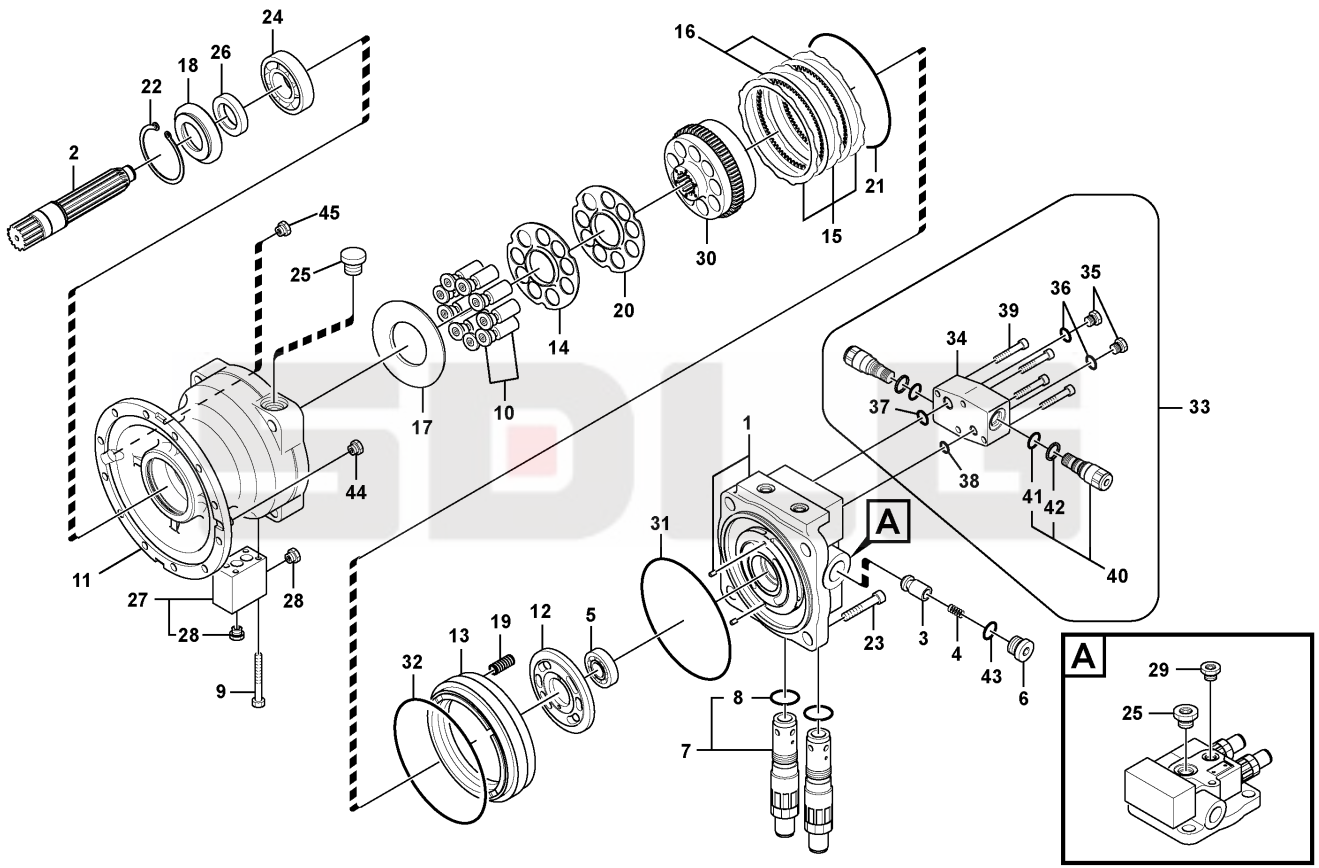
24
26
18
22
2
16
21
15
30
20
14
10
17
45
25
44
11
27
28
28
9
31
1
A
23
3
4
43
6
5
12
19
13
32
8
7
33
34
39
36
35
37
38
41
42
40
A
29
25
C7-6250

Key	Part No.	Description	Spare parts Y/N	Qty	Remarks
31	11212411	O-ring	Y	1	
32	11212437	O-ring	N	1	
33	11212410	Valve	Y	1	
34	11210825	Casing	N	1	
35	11210820	Plug	Y	2	
36	11211554	O-ring	N	2	
37	11210624	O-ring	Y	2	
38	11210703	O-ring	Y	2	
39	11212439	Screw	Y	4	
40	11212397	Valve	N	2	
41	11210137	O-ring	Y	1	
42	11211788	Sealing ring	N	1	
43	11210145	O-ring	Y	2	
44	11212429	Plug	Y	1	
45	11212438	Plug	Y	2	
46	11212430	Sealing kit	Y	1	
47	11211879	Swing motor	Y	1	

Turning joint

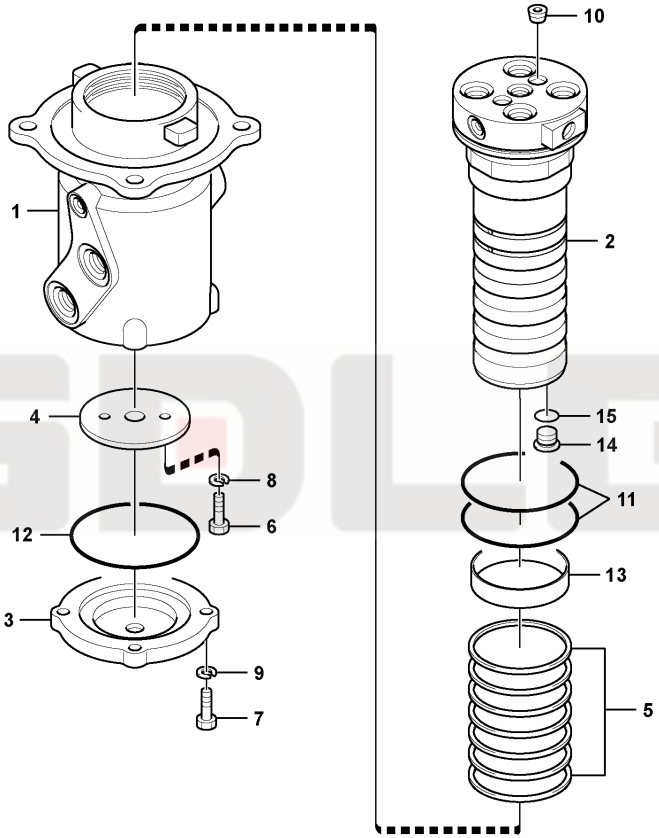

C8-6250

Key	Part No.	Description	Spare parts Y/N	Qty	Remarks
1	11211331	Hub sleeve	N	1	
2	kongbai	Kongbai	N	1	
3	11211332	Cover	Y	1	
4	11211333	Spacer	Y	1	
5	11210327	Sealing ring	Y	1	
6	11210123	Hexagon screw	Y	1	
7	11210099	Hexagon screw	Y	1	
8	11210064	Spring washer	Y	1	
9	11210065	Spring washer	Y	1	
10	11211705	Plug	Y	1	
11	11210180	O-ring	Y	1	
12	11212442	O-ring	N	1	
13	11211802	Bushing	Y	1	
14	11211337	Plug	Y	1	
15	11210141	O-ring	Y	1	
16	11210467	Sealing kit	Y	1	
17	11217176	Center passage	Y	1	

Swing gear system

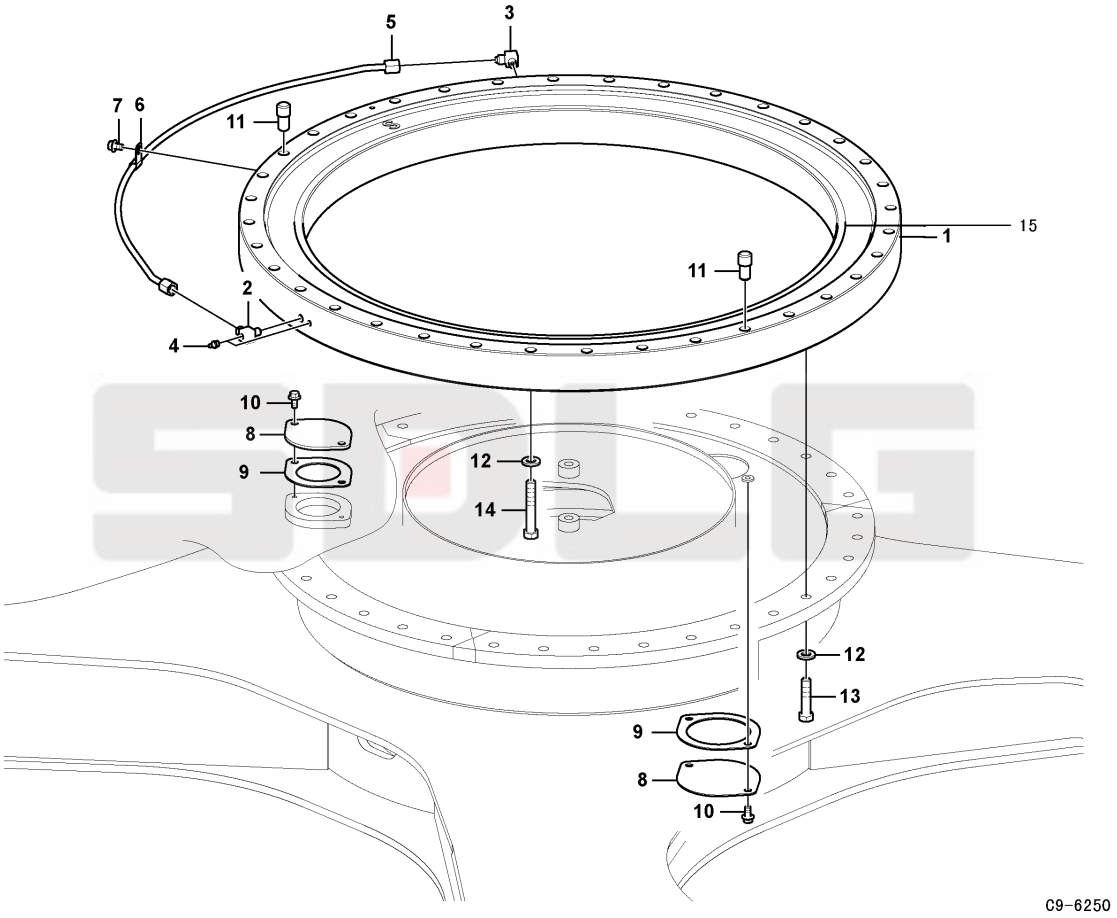

Key	Part No.	Description	Spare parts Y/N	Qty	Remarks
1	11216866	Swing gear	Y	1	
2	11210847	Nipple	Y	1	
3	11210846	Nipple	Y	1	
4	11210001	Lubricating nipple	N	2	
5	11217249	Pipe	Y	1	
6	11211654	Insulating clip	Y	1	
7	11210036	Flange screw	Y	1	
8	11210667	Cover	Y	2	
9	11210668	Gasket	Y	2	
10	11210034	Flange screw	Y	4	
11	11210666	Pin	Y	3	
12	11210203	Plain washer	Y	36	
13	11212446	Hexagon screw	Y	36	
14	11212445	Hexagon screw	Y	31	
15	11210884	Sealing	Y	2	

SDLG

F

HYDRAULIC SYSTEM

SHANDONG LINGONG CONSTRUCTION MACHINERY CO.,LTD.

Protecting plate

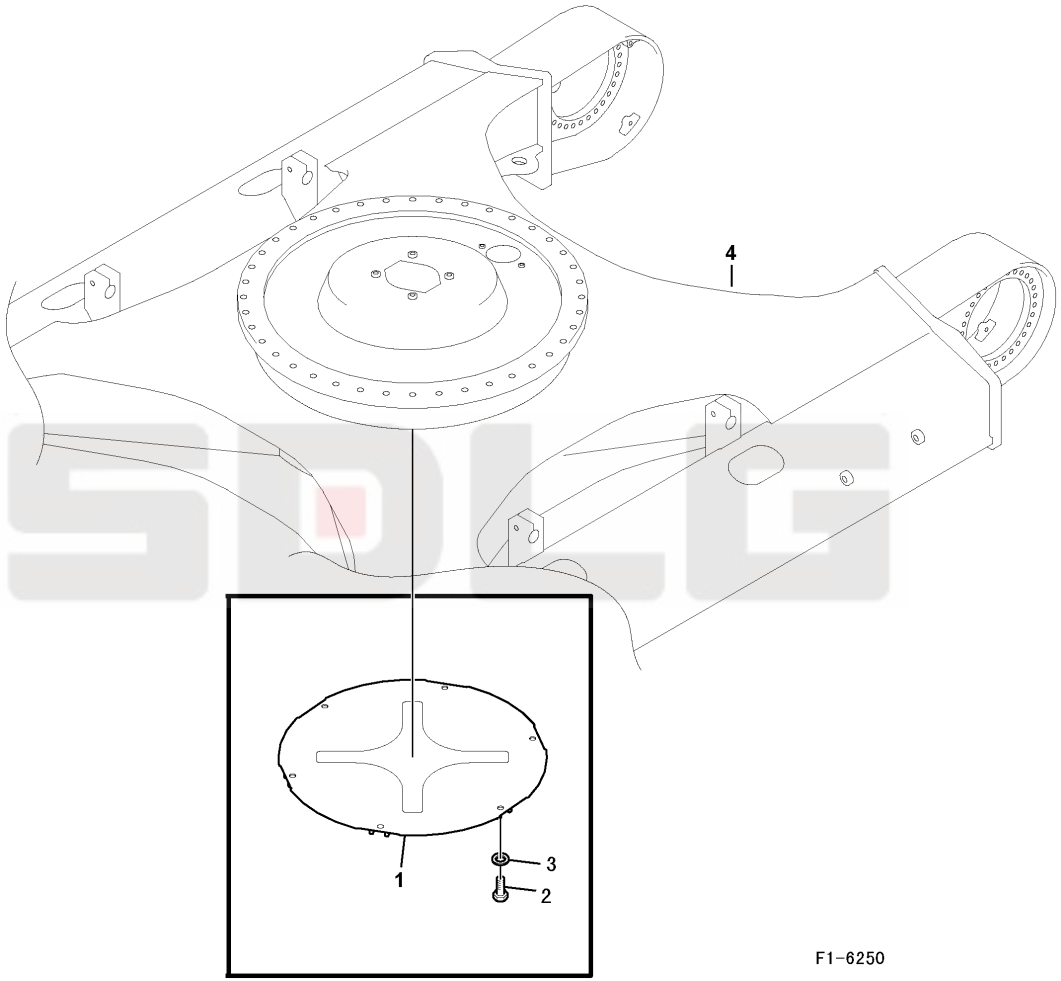

Key	Part No.	Description	Spare parts Y/N	Qty	Remarks
1	11216347	Cover	N	1	
2	11210101	Hexagon screw	Y	6	
3	11210199	Plain washer	Y	6	
4	11216772	Undercarriage frame	Y	1	

Protecting plate

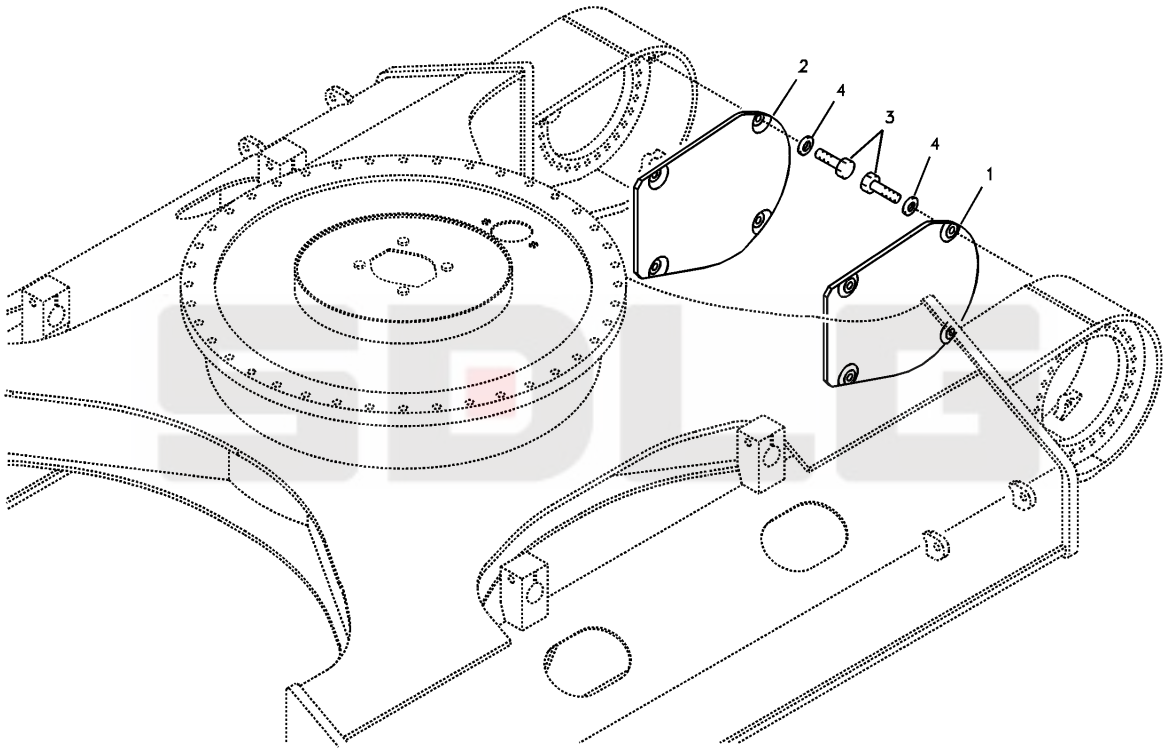

F2-6250

Key	Part No.	Description	Spare parts Y/N	Qty	Remarks
1	11218900	Plate	Y	1	
2	11218901	Plate	Y	1	
3	11210101	Hexagon screw	Y	8	
4	11210199	Plain washer	Y	8	

Counter weight

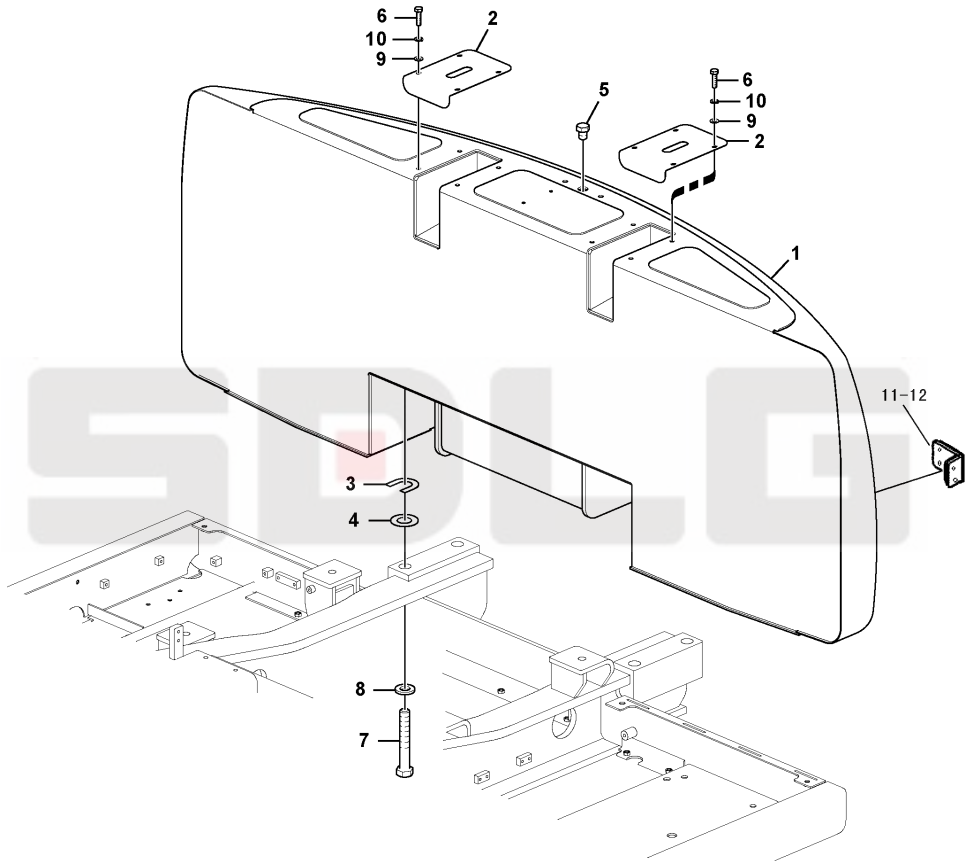

Key	Part No.	Description	Spare parts Y/N	Qty	Remarks
1	26280002961	Counterweight	Y	1	
2	11212406	Cover	Y	2	
3	11212407	Shim	Y	4	
4	11212408	Shim	Y	4	
5	11212447	Hexagon screw	Y	1	
6	11210120	Hexagon screw	Y	8	
7	11210212	Hexagon screw	Y	8	
8	11218898	Washer	Y	4	
9	11214768	Washer	N	8	
10	11210063	Spring washer	Y	8	
11	26360003681	Warning decal	N	1	
12	26360003691	Warning decal	N	1	

Track chain

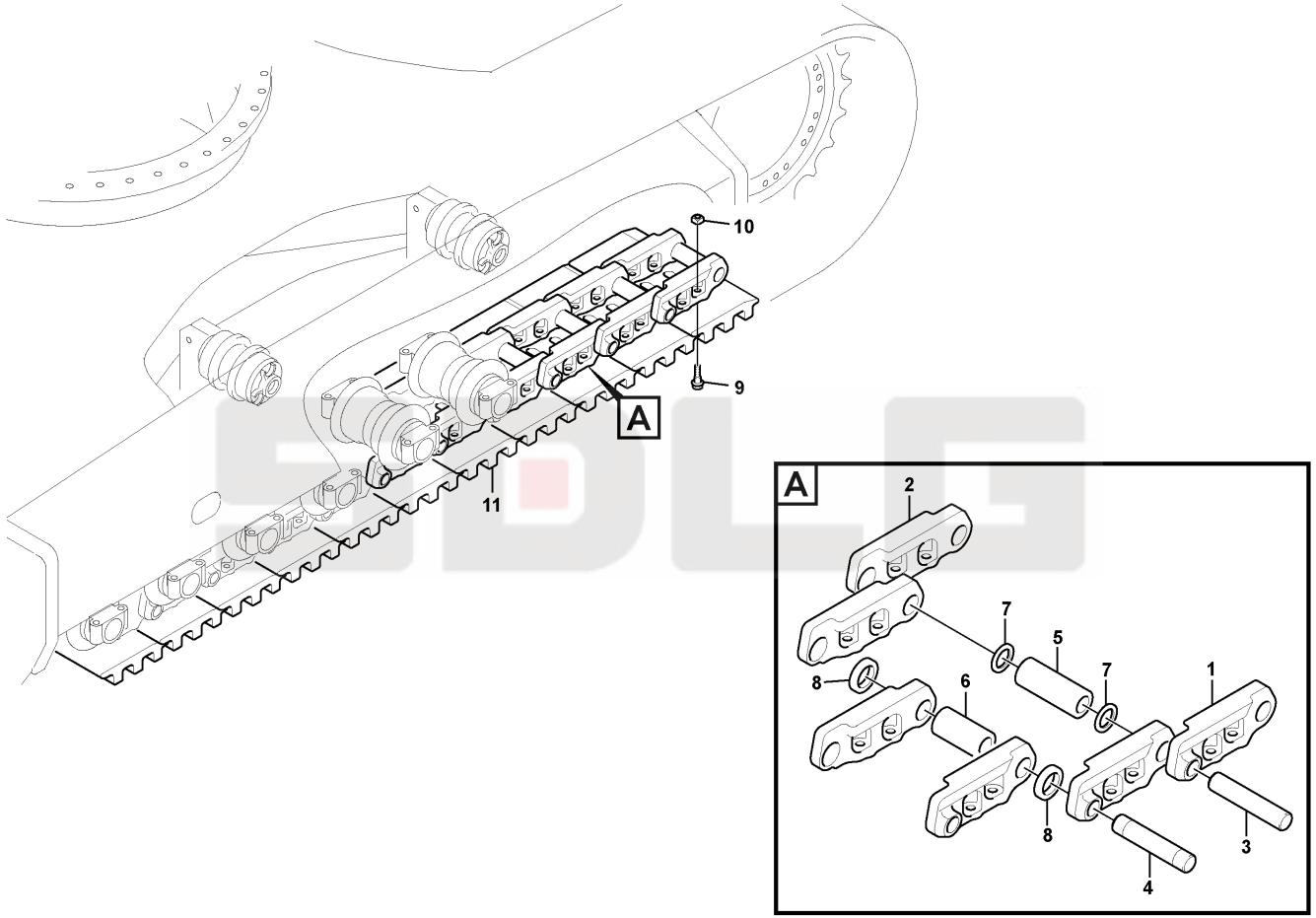

Key	Part No.	Description	Spare parts Y/N	Qty	Remarks
1	11211234	Link	Y	51	
2	11211235	Link	Y	51	
3	11210646	Pin	Y	50	
4	11210720	Pin	Y	1	
5	11210647	Bushing	Y	50	
6	11210648	Bushing	Y	1	
7	11210649	Sealing ring	N	100	
8	11210719	Spacer	Y	2	
9	11211056	Bolt	Y	408	
10	11211058	Nut	Y	408	
11	11216581	Track shoe	N	102	
12	11212431	Link	Y	2	

Undercarriage

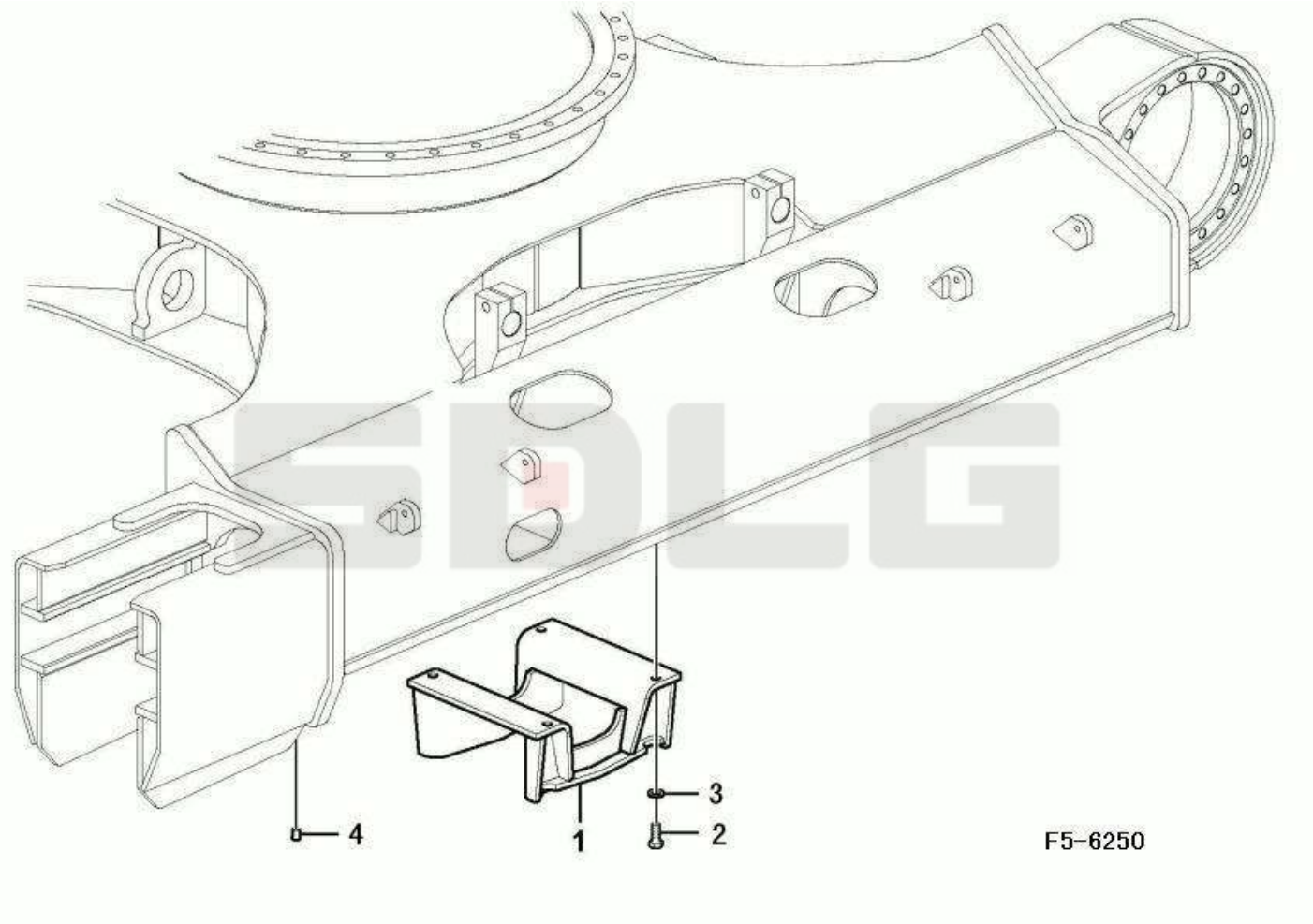

Key	Part No.	Description	Spare parts Y/N	Qty	Remarks
1	11216678	Guard	N	4	
2	11210162	Screw	Y	16	
3	11210202	Plain washer	Y	16	
4	11211061	Plug	Y	16	

Undercarriage

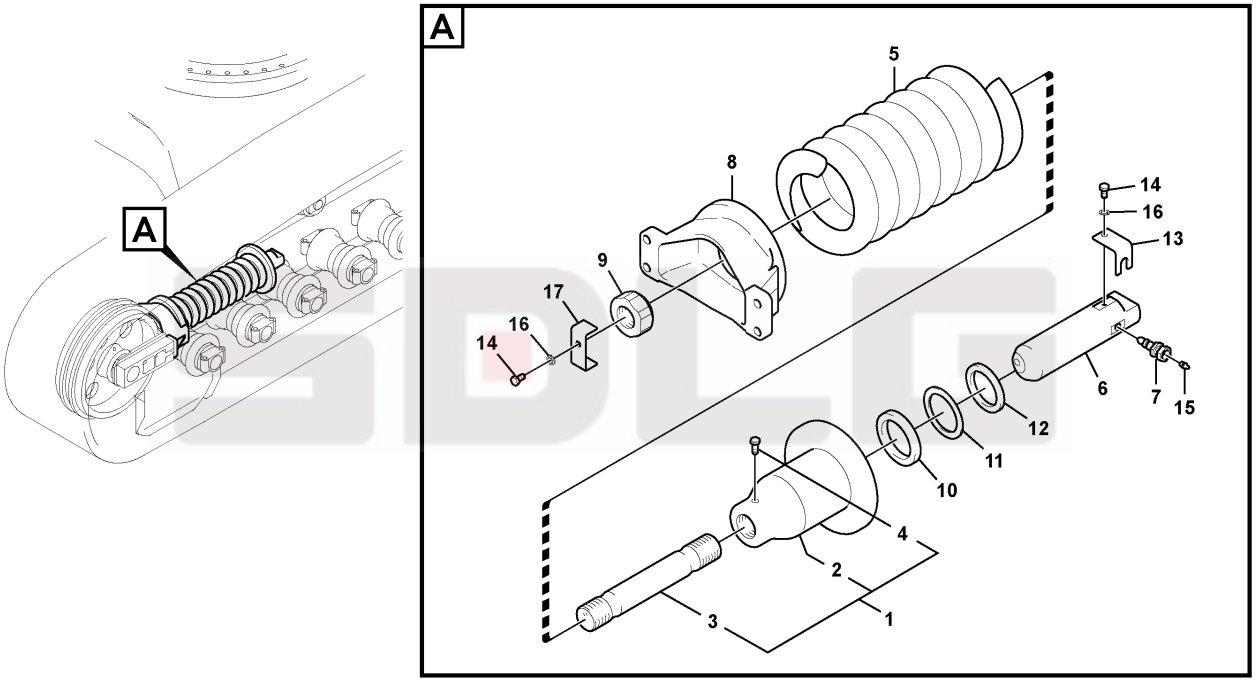

F6-6250

Key	Part No.	Description	Spare parts Y/N	Qty	Remarks
1	11217746	Cylinder block	N	1	
2	11212405	Body	Y	1	
3	11212399	Vise rod	Y	1	
4	11210123	Hexagon screw	Y	1	
5	11219382	Spring tensioner	Y	1	
6	11210702	Piston	Y	1	
7	11217664	Valve	Y	1	
8	11214367	Yoke	Y	1	
9	11212403	Nut	Y	1	
10	11217661	Sealing	Y	1	
11	11217662	Sealing ring	Y	1	
12	11217663	Sealing	Y	1	
13	11210682	Plate	Y	1	
14	11210122	Hexagon screw	Y	1	
15	11210001	Lubricating nipple	N	1	
16	11210064	Spring washer	Y	2	
17	11212402	Plate	Y	1	
18	4110002162	Sealing kit	Y	1	
19	11219381	Spring tensioner	Y	2	

Idler hub

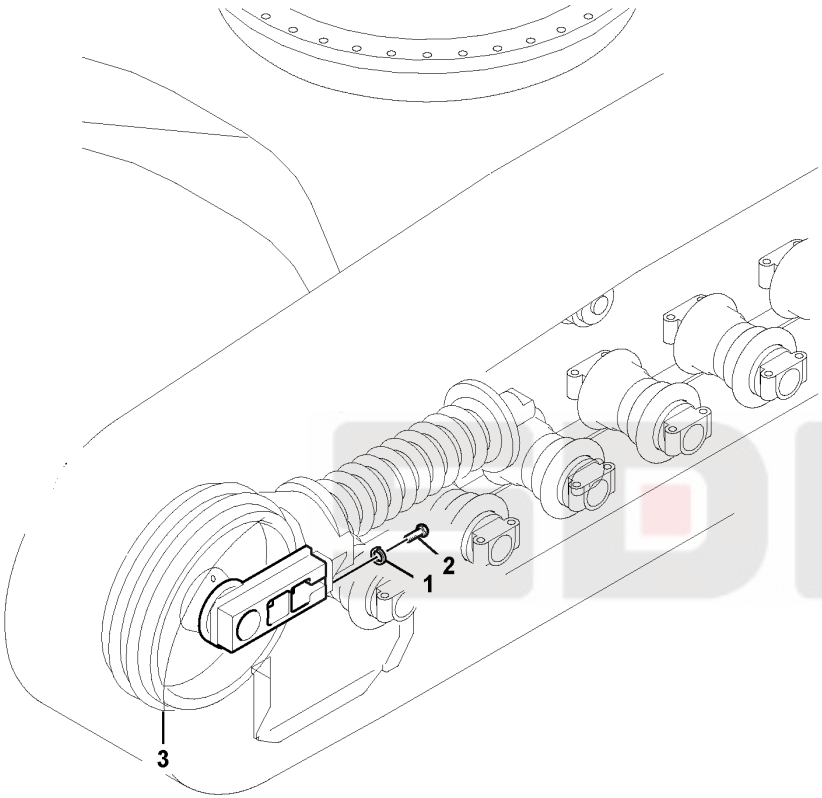

F7-6250

Key	Part No.	Description	Spare parts Y/N	Qty	Remarks
1	11210067	Spring washer	Y	8	
2	11210223	Hexagon screw	N	8	
3	11214320	Idler	N	2	

Top roller

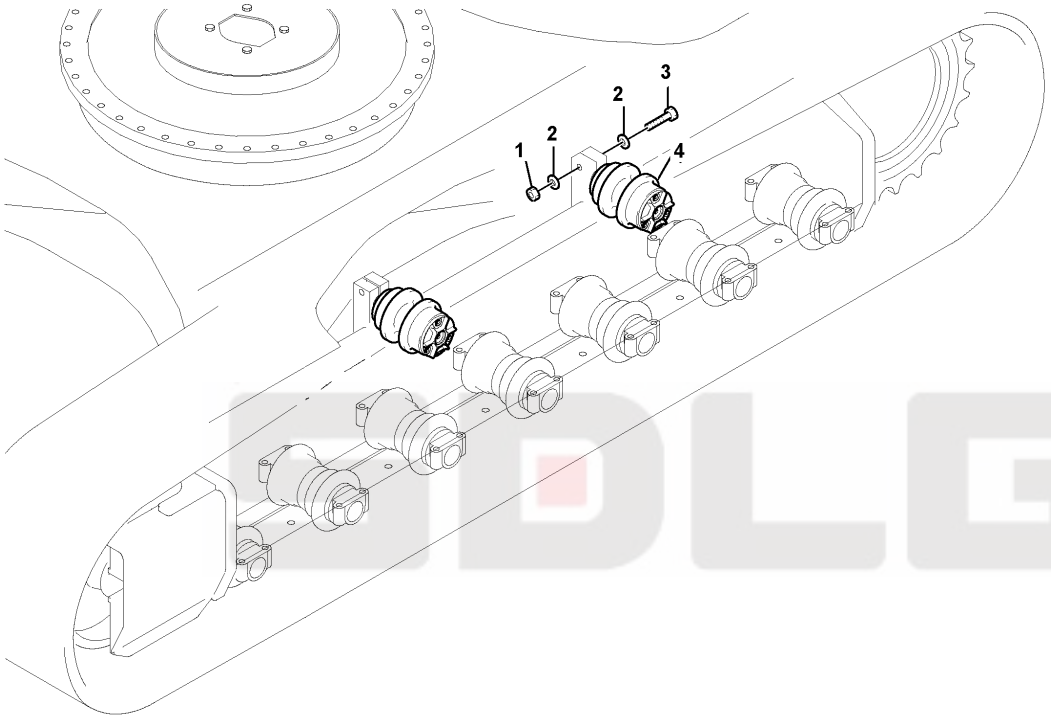

F8-6250

Key	Part No.	Description	Spare parts Y/N	Qty	Remarks
1	11210110	Hexagon nut	Y	4	
2	11210200	Plain washer	Y	8	
3	11210163	Hexagon screw	Y	4	
4	11211270	Roller	N	4	

Bottom roller

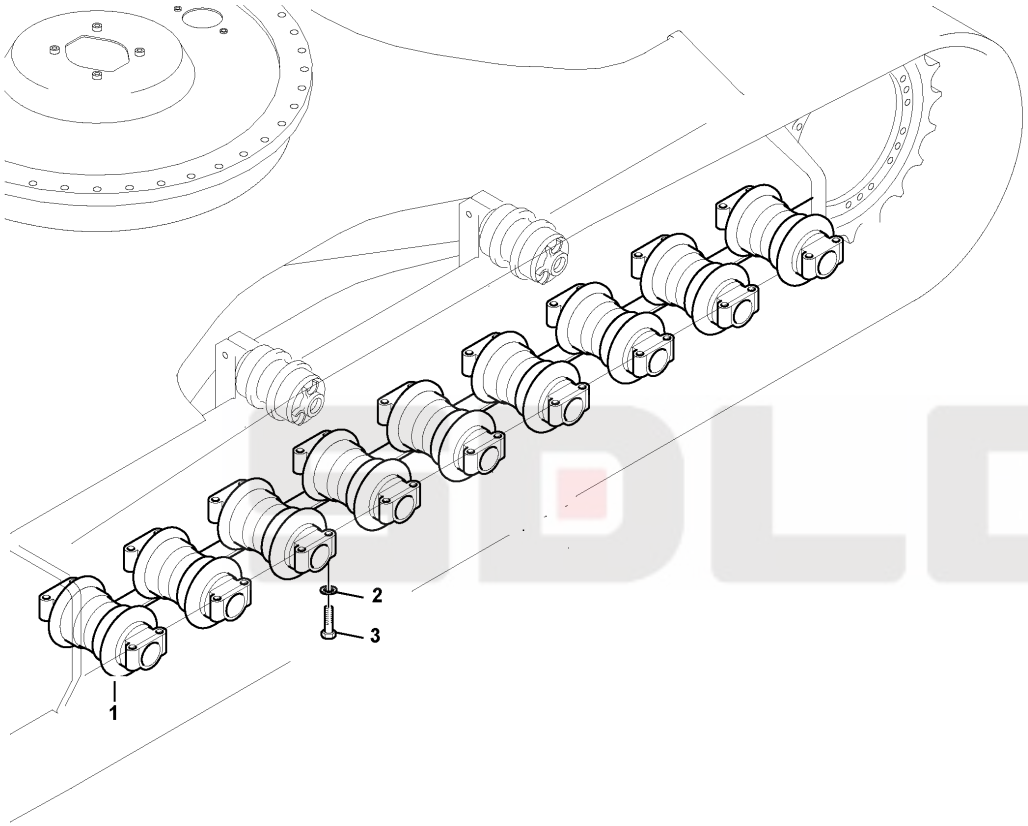

F9-6250

Key	Part No.	Description	Spare parts Y/N	Qty	Remarks
1	14403830	Roller	N	18	
2	11210202	Plain washer	Y	72	
3	11210209	Hexagon screw	Y	72	

Sprocket wheel

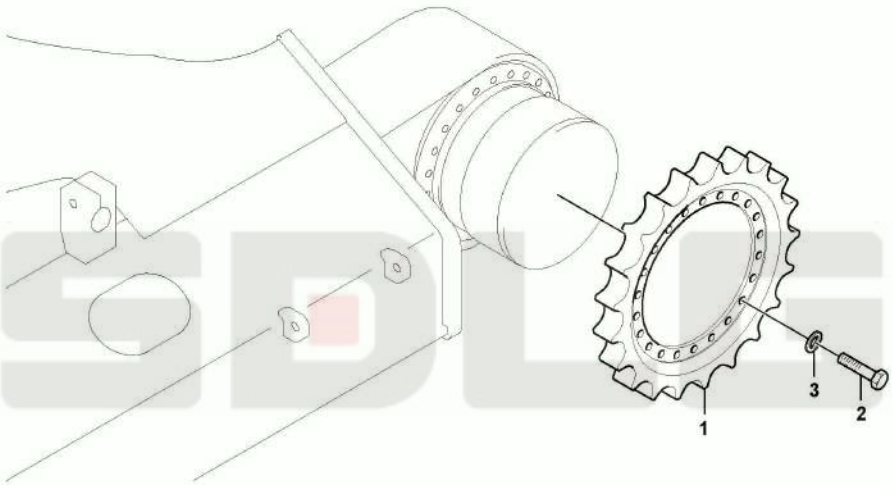

Key	Part No.	Description	Spare parts Y/N	Qty	Remarks
1	11212432	Sprocket	Y	2	
2	11212443	Hexagon screw	Y	36	
3	11210202	Plain washer	Y	36	

Pedal

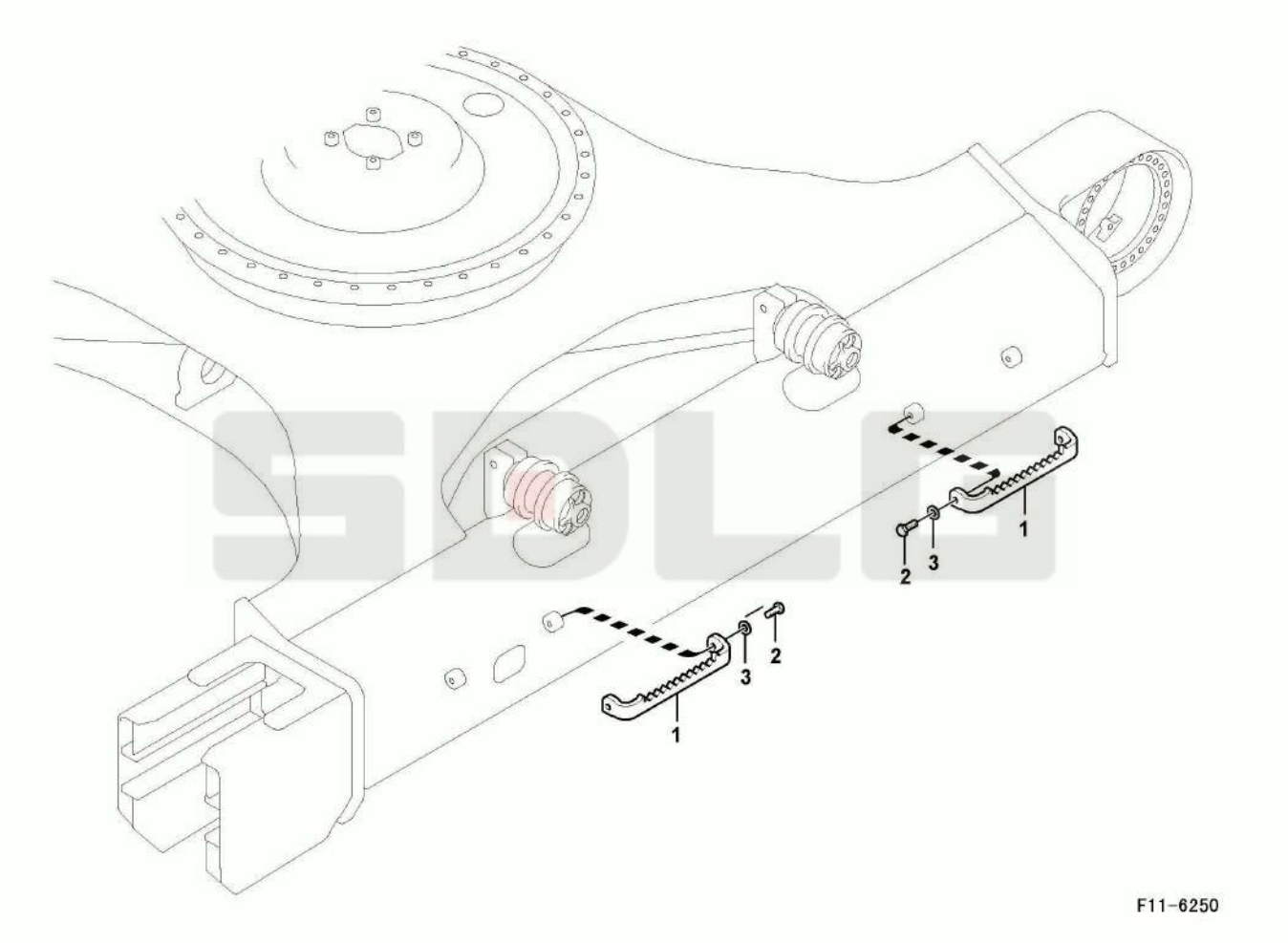

Key	Part No.	Description	Spare parts Y/N	Qty	Remarks
1	14401425	Pedal	N	4	
2	11210103	Hexagon screw	Y	8	
3	11210199	Plain washer	Y	8	

SDLG

G

SHANDONG LINGONG CONSTRUCTION MACHINERY CO.,LTD.

Cab equipment

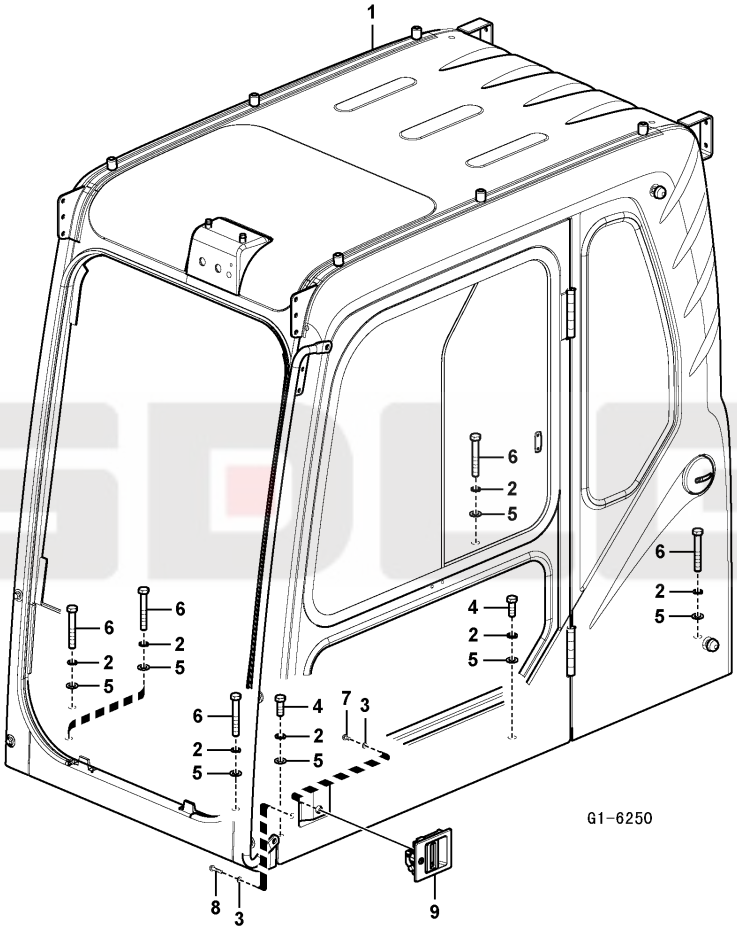

Key	Part No.	Description	Spare parts Y/N	Qty	Remarks
1	14401407	Cab	N	1	
2	11210067	Spring washer	Y	7	
3	11210057	Washer	Y	4	
4	11210102	Hexagon screw	Y	2	
5	11214770	Washer	N	7	
6	11210112	Hexagon screw	Y	5	
7	11210088	Six point socket screw	Y	2	
8	11210090	Six point socket screw	Y	2	
9	11214377	Door lock	N	1	

Cab assembly

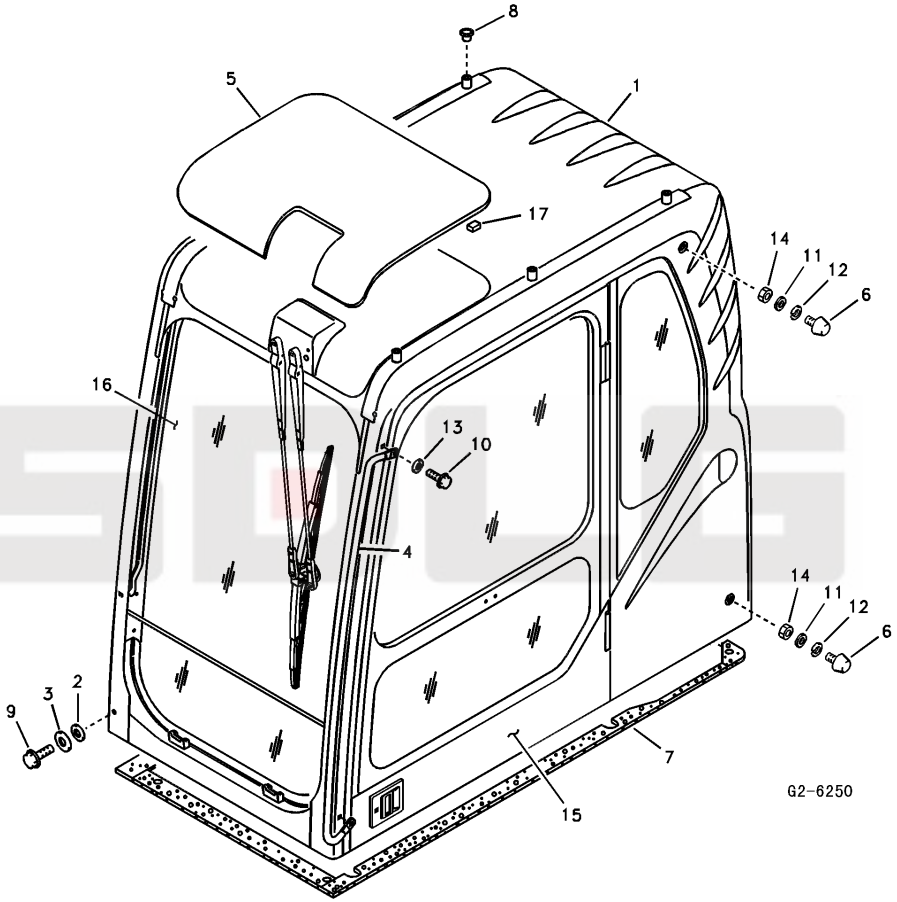

Key	Part No.	Description	Spare parts Y/N	Qty	Remarks
1	kongbai	Kongbai	N	1	
2	11210574	Washer	Y	4	
3	11210575	Washer	Y	4	
4	11210641	Handle	N	1	
5	11211169	Glass	N	1	
6	11210331	Bumper	Y	2	
7	11210581	Sponge	Y	1	
8	11210464	Plug	Y	6	
9	11210032	Flange screw	Y	4	
10	11210032	Flange screw	Y	2	
11	11214768	Washer	N	2	
12	11210063	Spring washer	Y	2	
13	11212281	Washer	Y	2	
14	11210129	Hexagon nut	Y	2	
15	11214645	Door	N	1	
16	11214644	Shield	N	1	
17	11216161	Spacer	Y	14	

Cab assembly

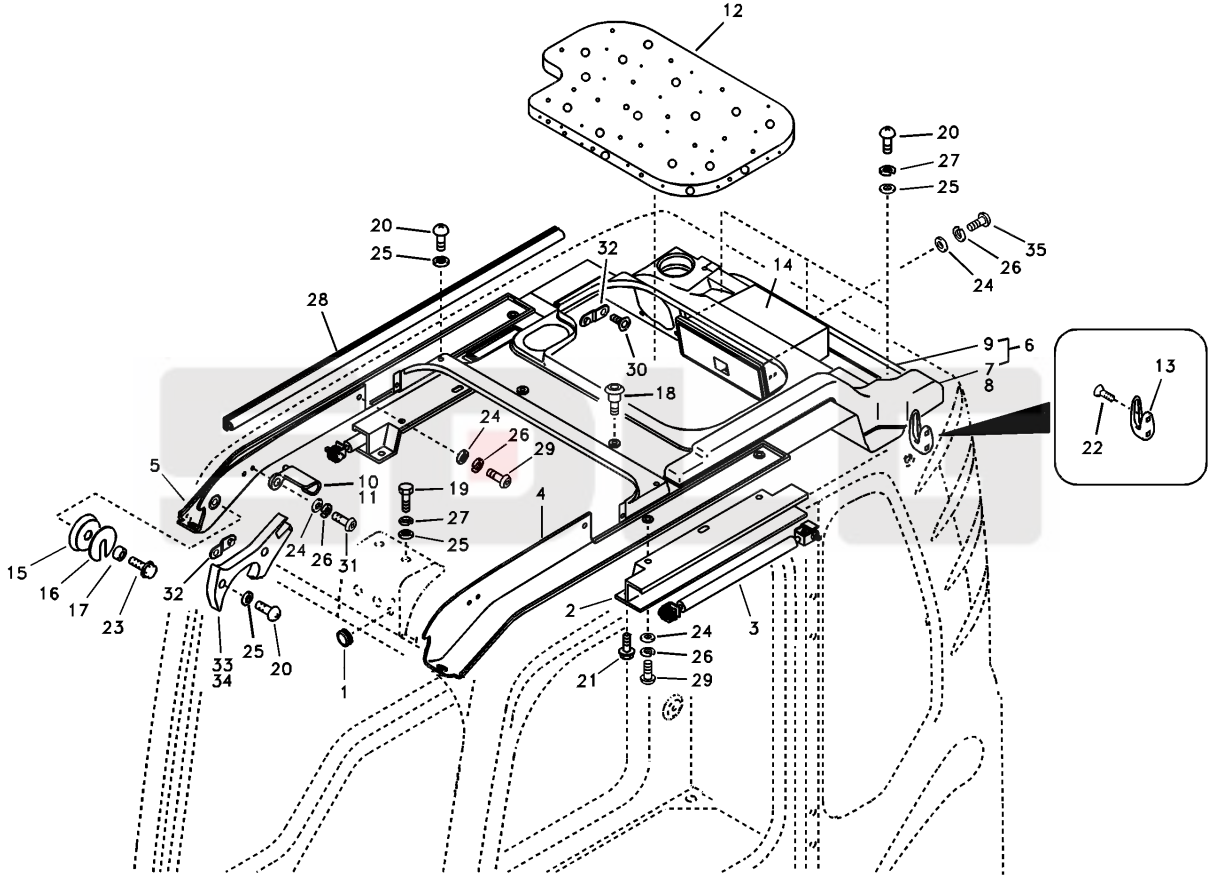

G3-6250

Key	Part No.	Description	Spare parts Y/N	Qty	Remarks
1	11210540	Cap	Y	1	
2	11210568	Guide	Y	2	
3	11219550	Gas spring	N	2	
4	11216699	Cover	N	1	
5	11216669	Cover	N	1	
6	11216663	Cab roof	N	1	
7	11210268	Duct	Y	1	
8	11210273	Duct	Y	1	
9	11216662	Cab roof	N	1	
10	11211166	Hook	Y	1	
11	11211167	Hook	Y	1	
12	11210317	Sponge	Y	1	
13	11210233	Clothes hook	Y	2	
14	11214597	Box	N	1	
15	11210579	Roller	N	2	
16	11210320	Guide	Y	2	
17	11210321	Boss	Y	2	
18	11210412	Clip	Y	3	
19	11210187	Hexagon screw	Y	2	
20	11211051	Screw	Y	9	
21	11210041	Flange screw	Y	4	
22	11211623	Cross recessed screw	Y	4	
23	11210043	Flange screw	Y	2	
24	11210057	Washer	Y	12	
25	11214768	Washer	N	11	
26	11210062	Spring washer	Y	12	
27	11210063	Spring washer	Y	5	
28	11211049	Weatherstrip	Y	1	
29	11210088	Six point socket screw	Y	10	
30	11210092	Hexagon screw	Y	8	

Cab assembly

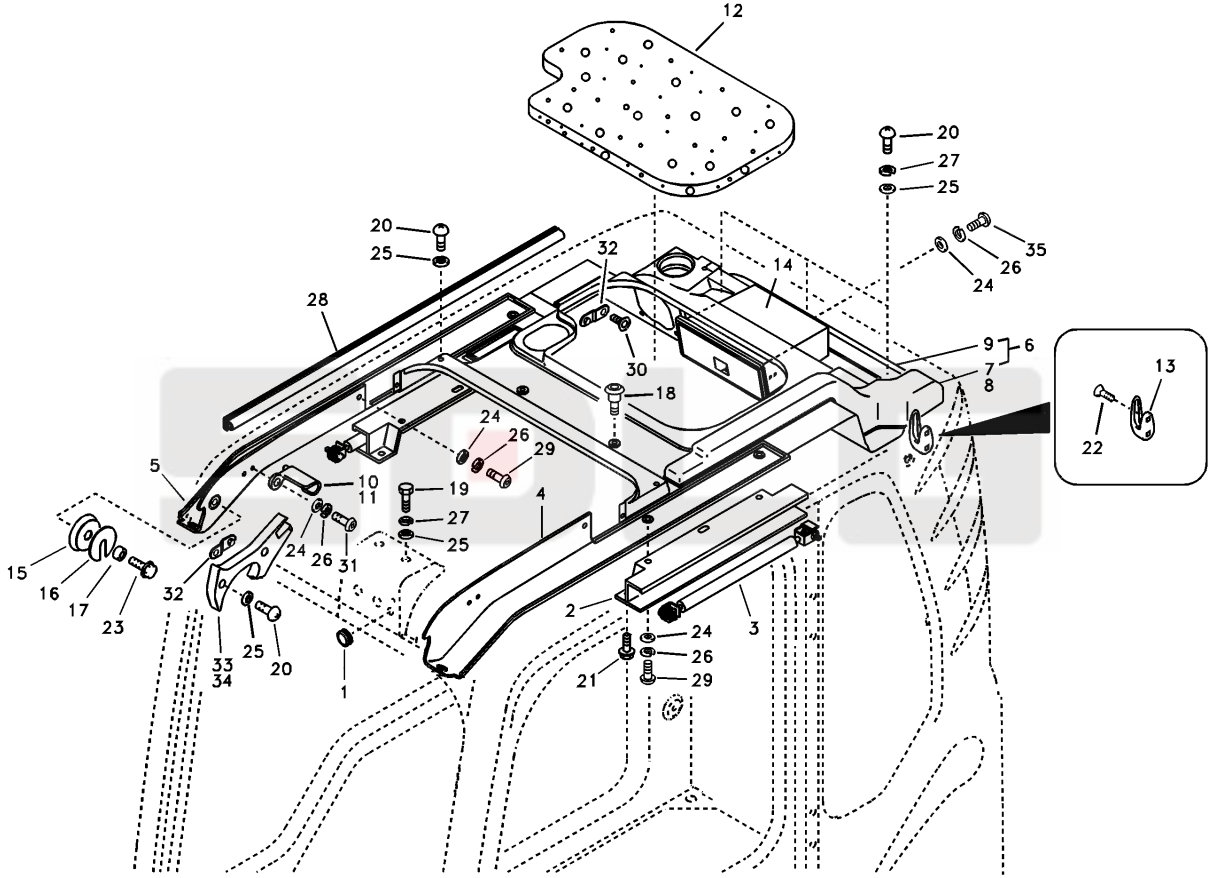

G3-6250

Key	Part No.	Description	Spare parts Y/N	Qty	Remarks
31	11210082	Six point socket screw	Y	2	
32	11210305	Trim plate	Y	4	
33	11210864	Bumper	Y	1	
34	11210865	Bumper	Y	1	
35	11214658	Hexagon screw	Y	2	

Cab assembly

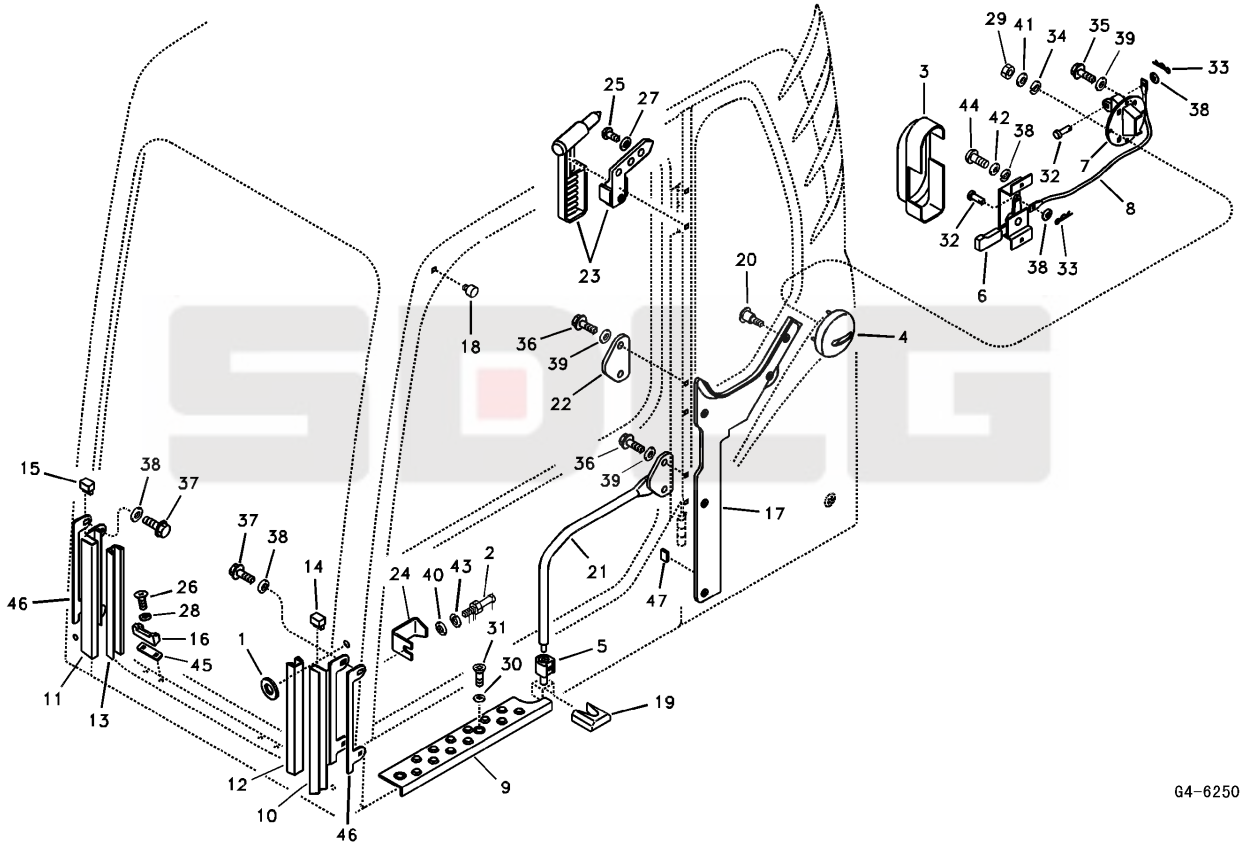

Key	Part No.	Description	Spare parts Y/N	Qty	Remarks
1	11210538	Washer	Y	1	
2	11214648	Trim plate	Y	1	
3	14401404	Cover	N	1	
4	11210303	Cover	Y	1	
5	11210547	Rubber block	Y	1	
6	11211347	Control lever	N	1	
7	11210302	Catch	Y	1	
8	11210304	Cable	Y	1	
9	11214598	Slip protection	Y	1	
10	11211164	Guide	N	1	
11	11211165	Guide	N	1	
12	11210511	Weatherstrip	Y	1	
13	11210512	Weatherstrip	Y	1	
14	11210513	Plug	Y	1	
15	11210514	Plug	Y	1	
16	11210642	Rubber block	Y	2	
17	11214649	Cab trim	N	1	
18	11210326	Bumper	Y	1	
19	11210548	Bumper	Y	1	
20	11210412	Clip	Y	5	
21	11211192	Handle	N	1	
22	11211193	Bracket	Y	1	
23	11210534	Hammer	N	1	
24	11211222	Trim plate	N	1	
25	11214650	Screw	N	3	
26	11211624	Cross recessed screw	Y	4	
27	11211040	Washer	Y	3	
28	11211041	Washer	Y	4	
29	11211038	Nut	Y	4	
30	11211042	Washer	Y	2	

Cab assembly

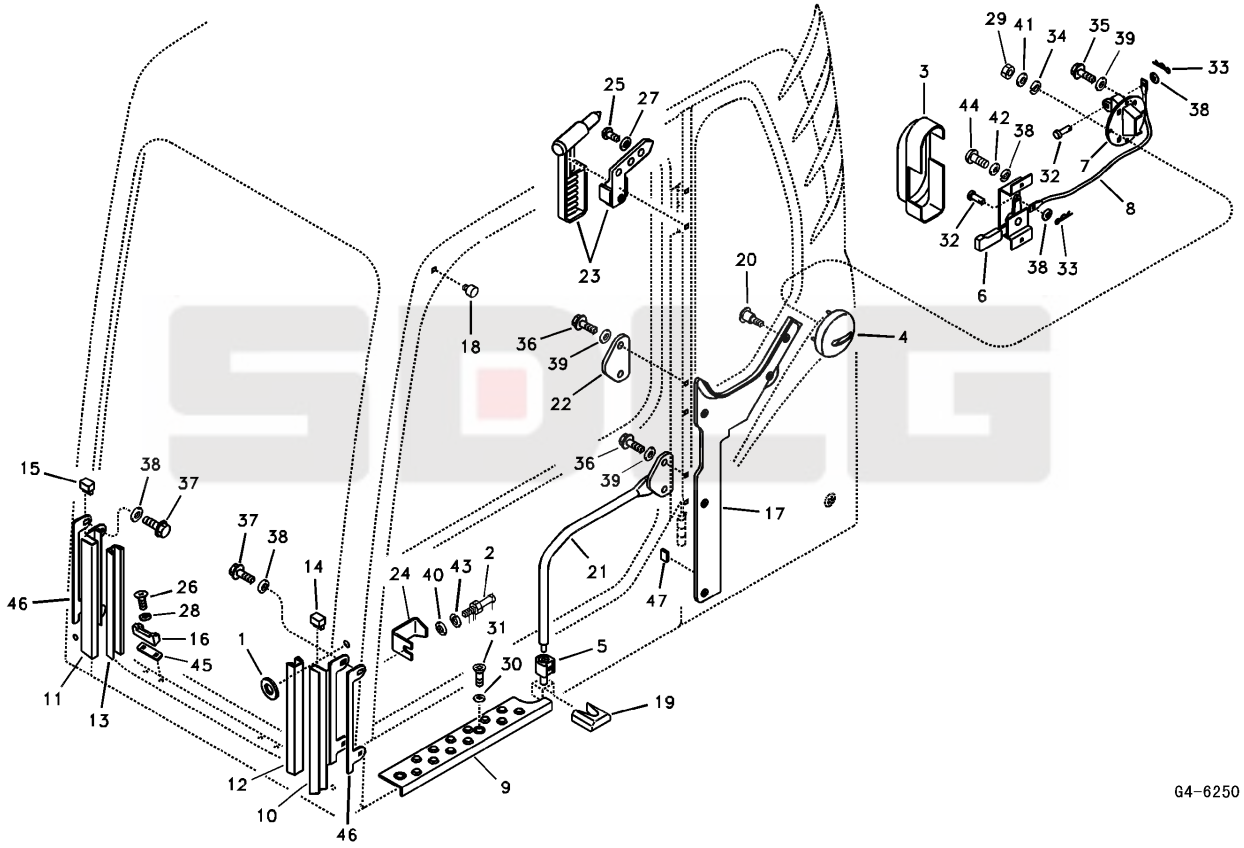

Key	Part No.	Description	Spare parts Y/N	Qty	Remarks
31	11210094	Hexagon screw	Y	2	
32	11211044	Pin	Y	2	
33	11211054	Split pin	Y	2	
34	11214752	Washer	N	4	
35	11210118	Hexagon screw	Y	4	
36	11210034	Flange screw	Y	4	
37	11210082	Six point socket screw	Y	4	
38	11210057	Washer	Y	9	
39	11214768	Washer	N	8	
40	11214769	Washer	N	1	
41	11210061	Spring washer	Y	4	
42	11210062	Spring washer	Y	3	
43	11210065	Spring washer	Y	1	
44	11210088	Six point socket screw	Y	3	
45	11210492	Shim	Y	2	
46	11210491	Pad	Y	2	
47	11210660	Sponge	Y	1	

Cab assembly

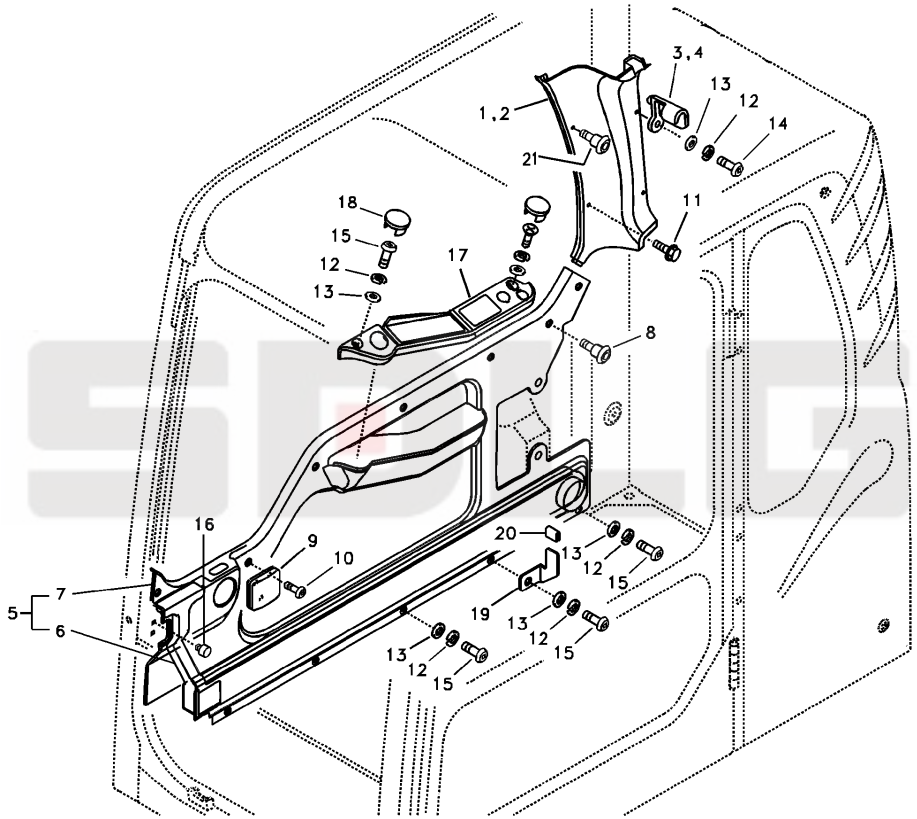

G5-6250

Key	Part No.	Description	Spare parts Y/N	Qty	Remarks
1	11211228	Cover	N	1	
2	11211229	Cover	N	1	
3	11211166	Hook	Y	2	
4	11211167	Hook	Y	2	
5	11214652	Cab trim	N	1	
6	11210269	Duct	N	1	
7	11214651	Cab trim	N	1	
8	11210412	Clip	Y	7	
9	kongbai	Kongbai	N	1	
10	11210085	Six point socket screw	Y	5	
11	11210034	Flange screw	Y	2	
12	11210062	Spring washer	Y	12	
13	11210057	Washer	Y	12	
14	11210085	Six point socket screw	Y	4	
15	11210088	Six point socket screw	Y	8	
16	11210326	Bumper	Y	2	
17	11212908	Panel	N	1	
18	14401406	Clip	Y	3	
19	11211241	Bracket	N	1	
20	11210660	Sponge	Y	1	
21	11211623	Cross recessed screw	Y	1	

Cowl frame

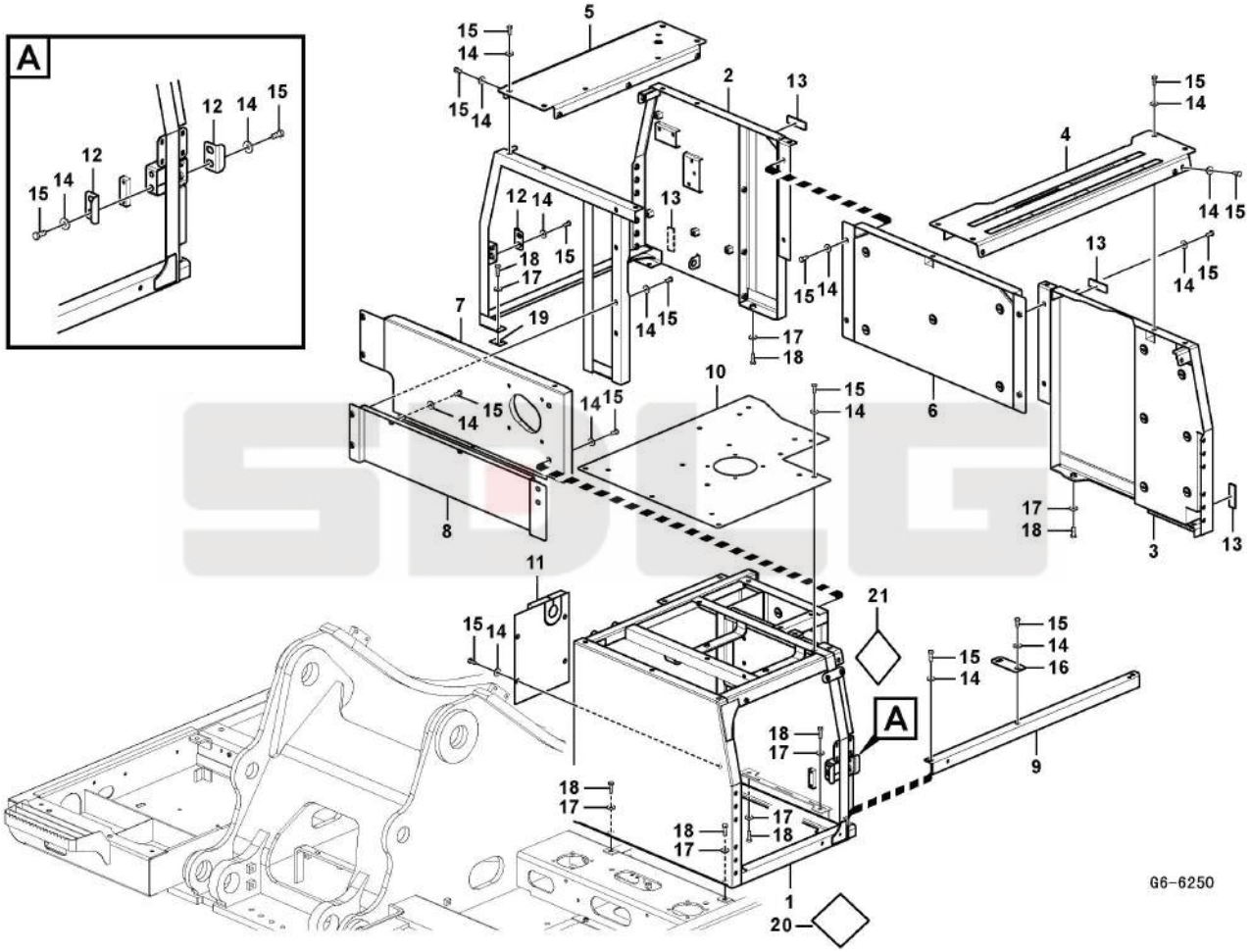

Key	Part No.	Description	Spare parts Y/N	Qty	Remarks
1	11219501	Frame	N	1	
2	11212513	Frame	N	1	
3	11212515	Cover	Y	1	
4	26330014791	Cover plate	Y	1	
5	11212511	Cover	Y	1	
6	11212516	Frame	Y	1	
7	11212517	Cover	Y	1	
8	11212518	Cover	Y	1	
9	11212510	Frame	Y	1	
10	11212512	Cover	Y	1	
11	11212509	Cover	Y	1	
12	11210501	Plate	Y	3	
13	11210507	Sponge	Y	4	
14	11210538	Washer	Y	46	
15	11210098	Hexagon screw	Y	46	
16	kongbai	Kongbai	N	1	
17	11210538	Washer	Y	12	
18	11210099	Hexagon screw	Y	12	
19	11211123	Shim	Y	2	
20	11218975	Sponge	Y	1	
21	11218976	Sponge	Y	1	

Engine hood system

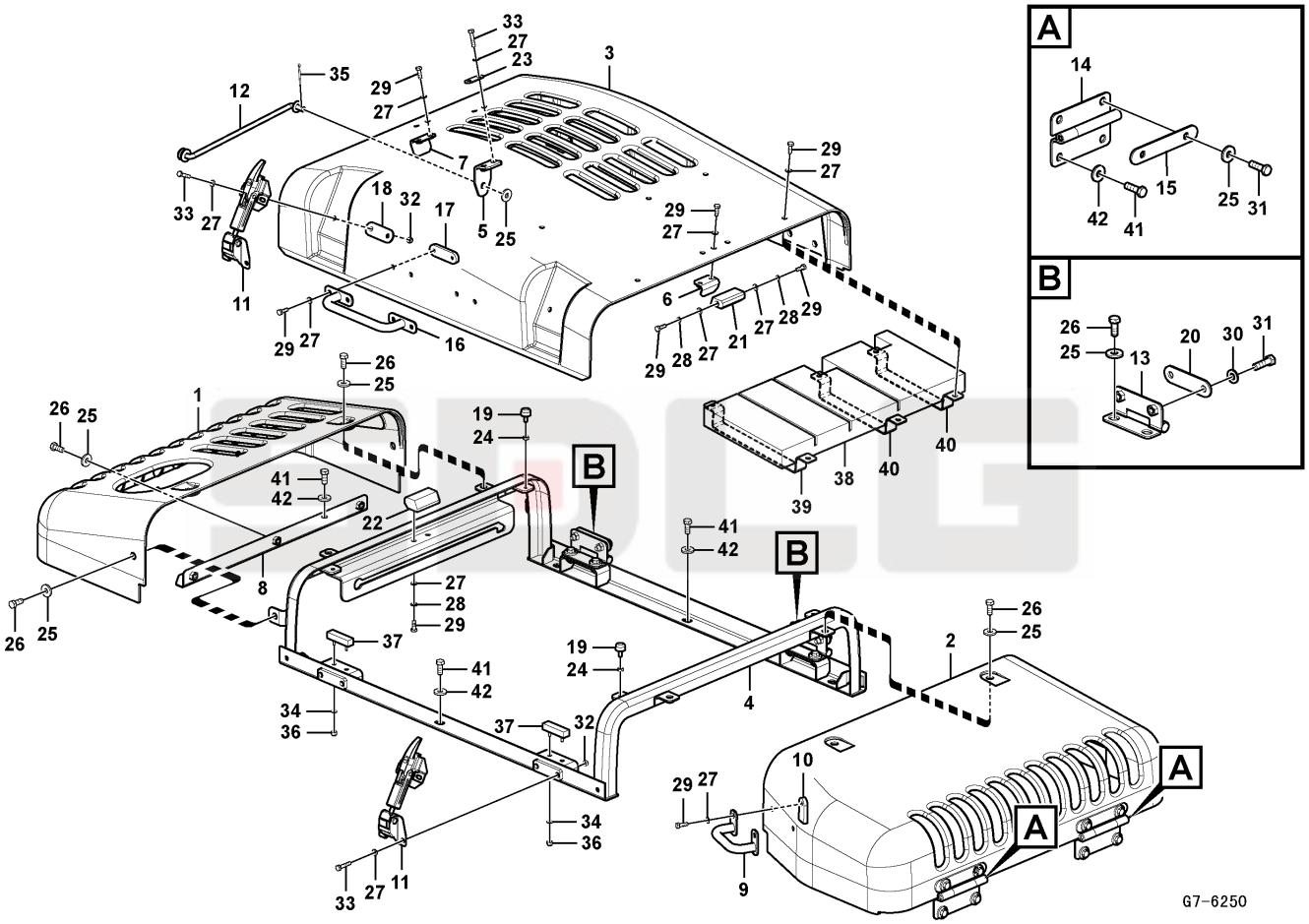

Key	Part No.	Description	Spare parts Y/N	Qty	Remarks
1	11216733	Cover	N	1	
2	kongbai	Kongbai	N	1	
3	kongbai	Kongbai	N	1	
4	kongbai	Kongbai	N	1	
5	kongbai	Kongbai	N	1	
6	kongbai	Kongbai	N	1	
7	kongbai	Kongbai	N	1	
8	kongbai	Kongbai	N	1	
9	kongbai	Kongbai	N	1	
10	11216735	Bracket	N	2	
11	11216036	Catch	N	2	
12	11210403	Rod	Y	1	
13	11216715	Hinge	N	2	
14	11216034	Hinge	N	2	
15	11216035	Shim	N	2	
16	11216714	Handle	N	1	
17	kongbai	Kongbai	N	2	
18	kongbai	Kongbai	N	2	
19	11212633	Bumper	Y	4	
20	kongbai	Kongbai	N	2	
21	kongbai	Kongbai	N	1	
22	11212634	Guide	Y	1	
23	kongbai	Kongbai	N	1	
24	11210129	Hexagon nut	Y	4	
25	11210538	Washer	Y	18	
26	11210098	Hexagon screw	Y	13	
27	11210218	Washer	Y	30	
28	11210063	Spring washer	Y	4	
29	11210119	Hexagon screw	Y	20	
30	11210198	Plain washer	Y	4	

Engine hood system

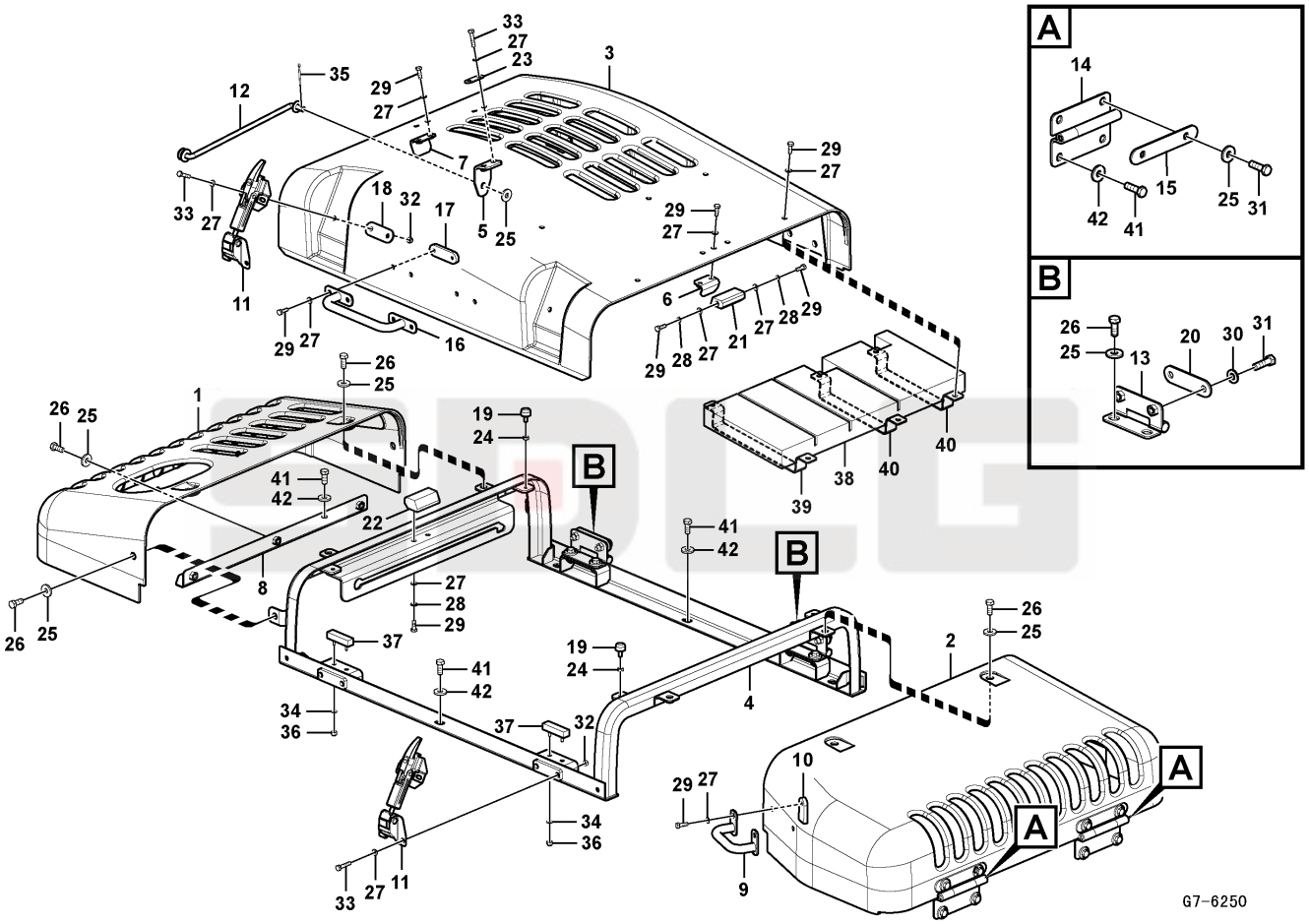

Key	Part No.	Description	Spare parts Y/N	Qty	Remarks
31	11210099	Hexagon screw	Y	8	
32	11211053	Lock nut	Y	8	
33	11212647	Hexagon screw	Y	10	
34	11212648	Plain washer	Y	4	
35	11212646	Split pin	N	1	
36	11212645	Lock nut	N	4	
37	11210578	Bushing	Y	2	
38	kongbai	Kongbai	N	1	
39	kongbai	Kongbai	N	1	
40	kongbai	Kongbai	N	2	
41	11210098	Hexagon screw	Y	12	
42	11210538	Washer	Y	12	
43	11216734	Hood	Y	1	

Side door

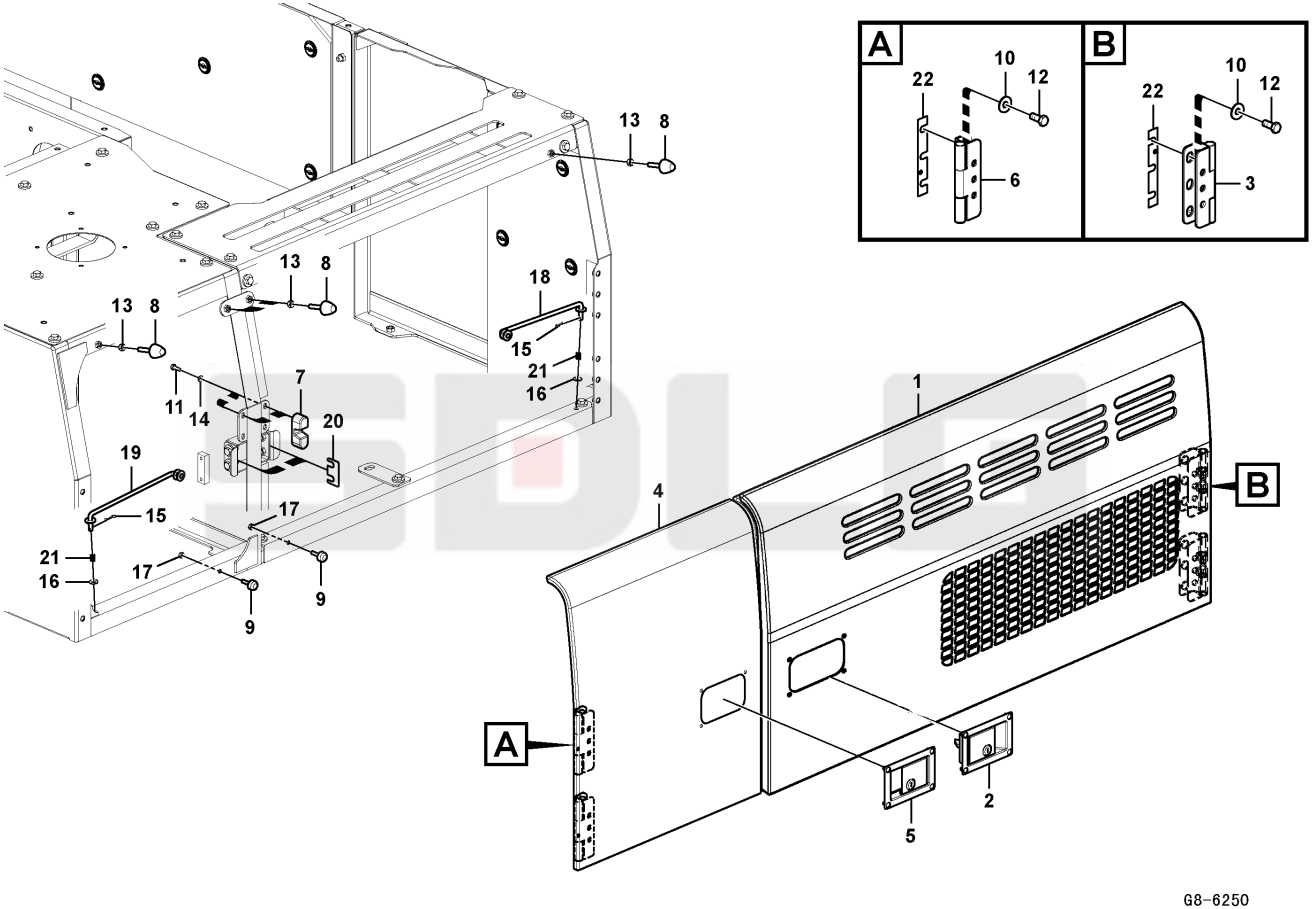

Key	Part No.	Description	Spare parts Y/N	Qty	Remarks
1	26330014861	Rear door	N	1	
2	11210363	Latch	N	1	
3	11210901	Hinge	N	2	
4	11216570	Door	Y	1	
5	11216049	Latch	N	1	
6	11216053	Hinge	Y	2	
7	11211010	Bump stop	Y	2	
8	11210576	Bolt	Y	4	
9	11210361	Bumper	Y	2	
10	11210580	Collar	Y	12	
11	11210119	Hexagon screw	Y	4	
12	11210098	Hexagon screw	Y	12	
13	11210130	Hexagon nut	Y	4	
14	11210218	Washer	Y	4	
15	11211662	Pin	Y	2	
16	11212281	Washer	Y	2	
17	11210129	Hexagon nut	Y	2	
18	11210418	Rod	Y	1	
19	11210419	Rod	Y	1	
20	11212649	Shim	Y	2	
21	11210493	Spring	Y	2	
22	11212649	Shim	Y	4	

Side door

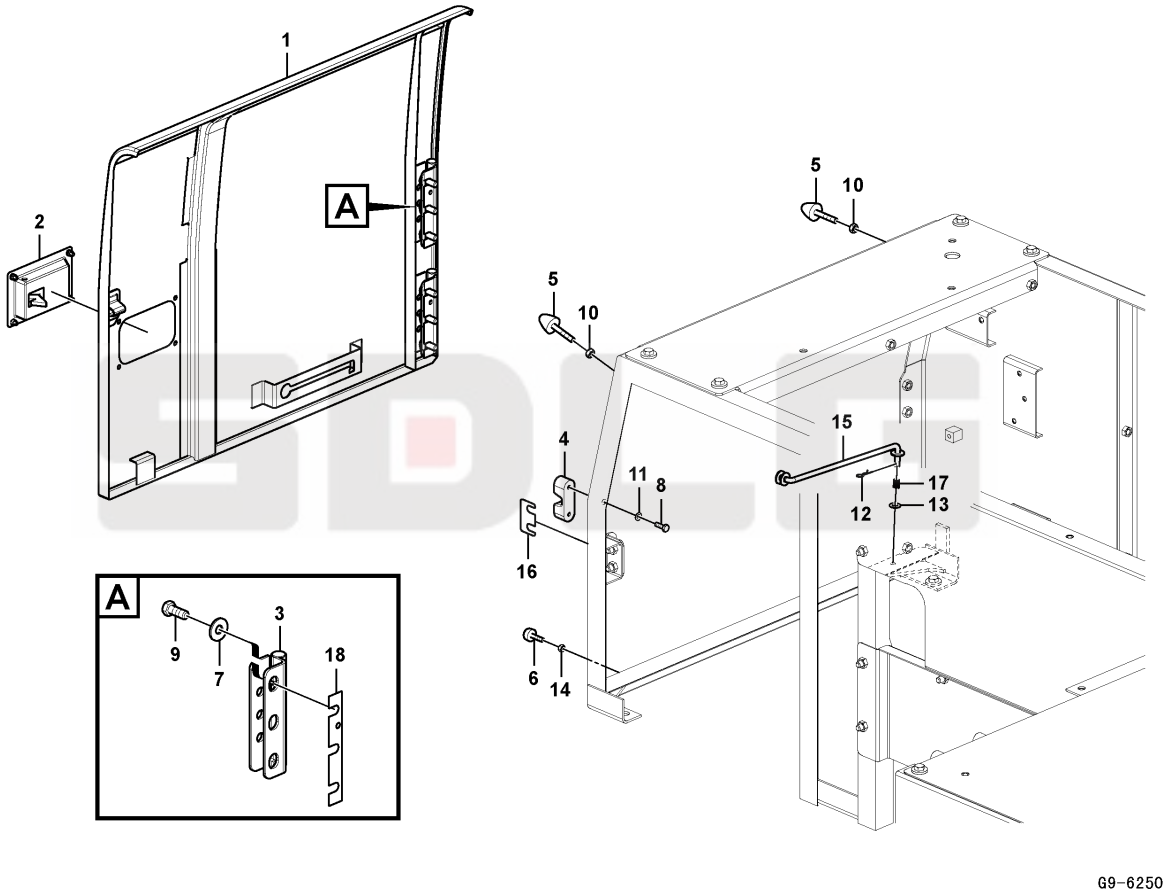

Key	Part No.	Description	Spare parts Y/N	Qty	Remarks
1	11210919	Door	N	1	
2	11216049	Latch	N	1	
3	11216053	Hinge	Y	2	
4	11211010	Bump stop	Y	1	
5	11210576	Bolt	Y	2	
6	11210361	Bumper	Y	1	
7	11210580	Collar	Y	6	
8	11210119	Hexagon screw	Y	2	
9	11210098	Hexagon screw	Y	6	
10	11210130	Hexagon nut	Y	2	
11	11210218	Washer	Y	2	
12	11211662	Pin	Y	1	
13	11212281	Washer	Y	1	
14	11210129	Hexagon nut	Y	1	
15	11210419	Rod	Y	1	
16	11212649	Shim	Y	1	
17	11210493	Spring	Y	1	
18	kongbai	Kongbai	N	2	

Cover plate

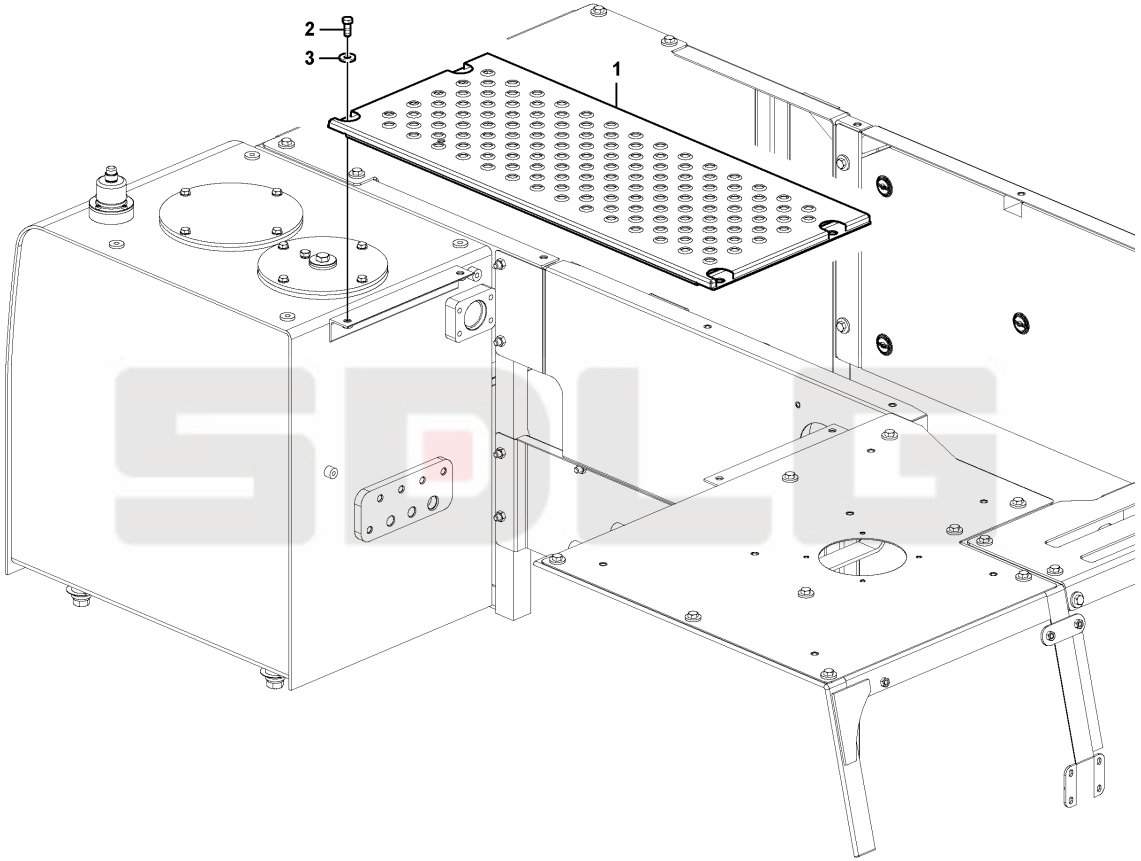

G10-6250

Key	Part No.	Description	Spare parts Y/N	Qty	Remarks
1	11216737	Cover	Y	1	
2	11210098	Hexagon screw	Y	4	
3	11210538	Washer	Y	5	

Cover plate

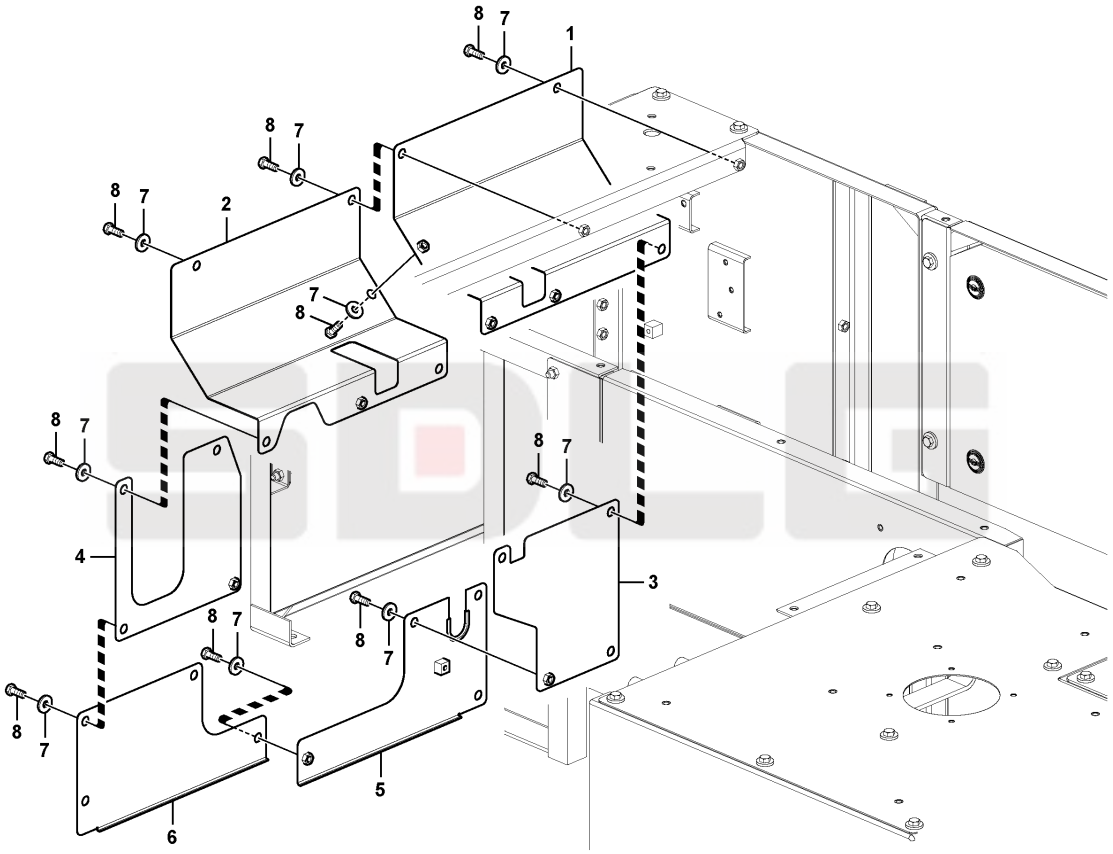

G11-6250

Key	Part No.	Description	Spare parts Y/N	Qty	Remarks
1	kongbai	Kongbai	N	1	
2	kongbai	Kongbai	N	1	
3	kongbai	Kongbai	N	1	
4	kongbai	Kongbai	N	1	
5	kongbai	Kongbai	N	1	
6	kongbai	Kongbai	N	1	
7	11210538	Washer	Y	16	
8	11210098	Hexagon screw	Y	16	

Hand rail

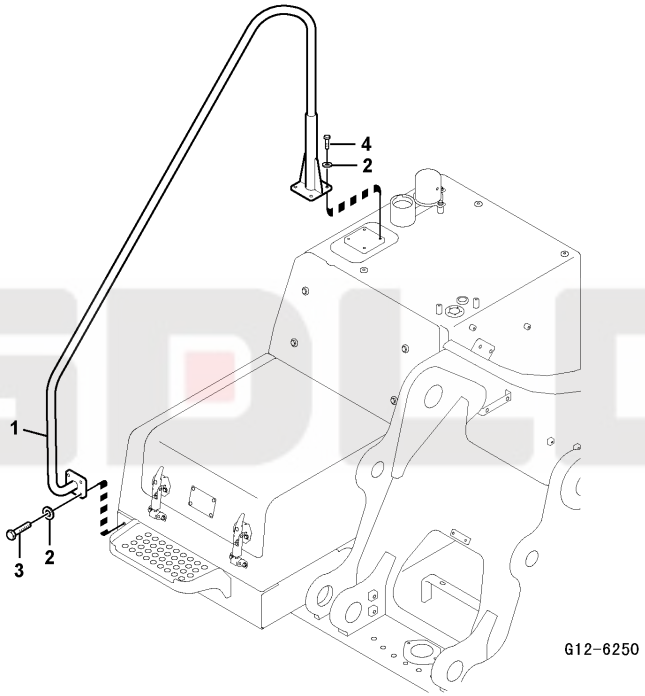

Key	Part No.	Description	Spare parts Y/N	Qty	Remarks
1	14401307	Hand rail	Y	1	
2	11210197	Plain washer	Y	6	
3	11210125	Hexagon screw	Y	4	
4	11210123	Hexagon screw	Y	2	

Tool box

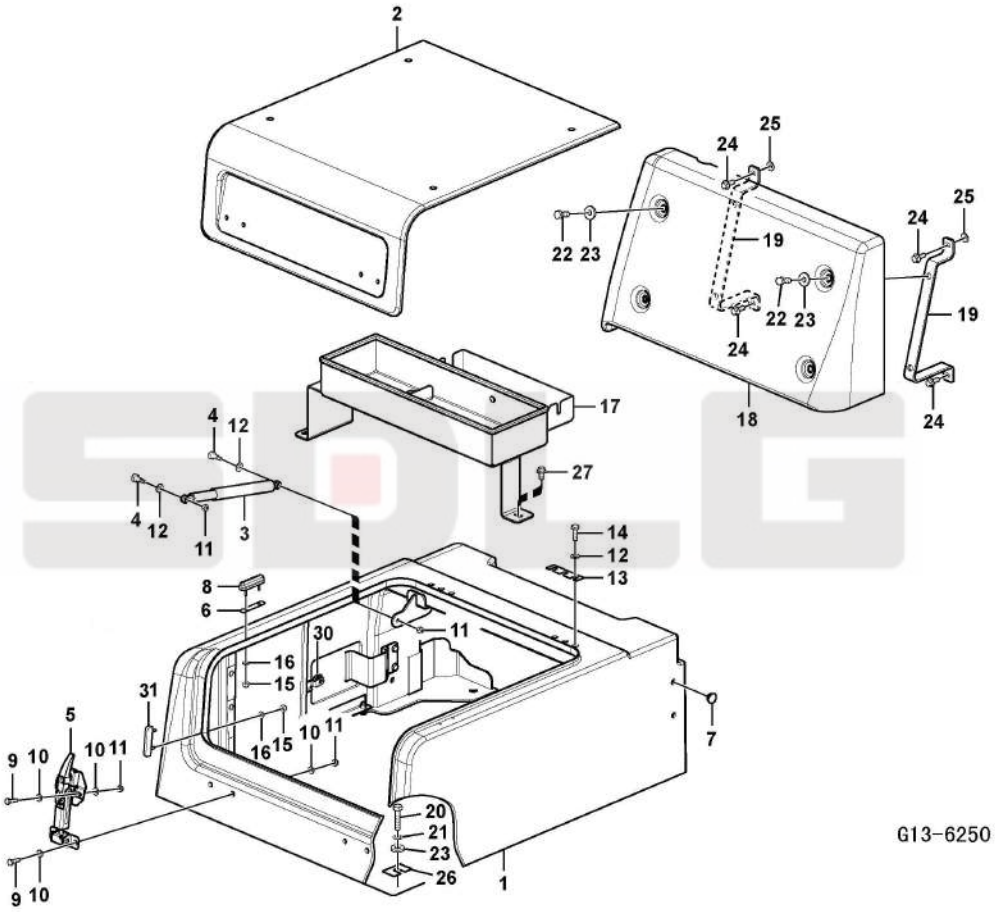
2
25
24
22 23
19
25
24
22 23
19
24
18
24
17
4
12
27
4
12
11
3
14
12
13
8
6
30
11
16
15
31
5
9 10
10 11
16 15
10 11
7
20
21
23
26
1
9 10
G13-6250

Key	Part No.	Description	Spare parts Y/N	Qty	Remarks
1	14400862	Box frame	Y	1	
2	14400863	Cover plate	Y	1	
3	11210437	Gas spring	Y	1	
4	11210577	Bolt	Y	2	
5	11210526	Catch	Y	2	
6	11210527	Shim	Y	2	
7	11210440	Grommet	Y	4	
8	11210525	Bushing	Y	4	
9	11210120	Hexagon screw	Y	8	
10	11210218	Washer	Y	16	
11	11211053	Lock nut	Y	10	
12	11210197	Plain washer	Y	8	
13	11211122	Shim	Y	2	
14	11210124	Hexagon screw	Y	6	
15	11211629	Lock nut	Y	8	
16	11211632	Washer	N	8	
17	11215839	Tool box	N	1	
18	14401257	Cover	Y	1	
19	14402075	Bracket	Y	2	
20	11210100	Hexagon screw	Y	4	
21	11210065	Spring washer	Y	4	
22	11210098	Hexagon screw	Y	4	
23	11210538	Washer	Y	8	
24	11210032	Flange screw	Y	4	
25	11212281	Washer	Y	2	
26	11211123	Shim	Y	4	
27	11210034	Flange screw	Y	3	
28	14400861	Tool box	Y	1	
29	11214458	Weatherstrip	Y	5	
30	11216198	Door lock	Y	1	

Tool box

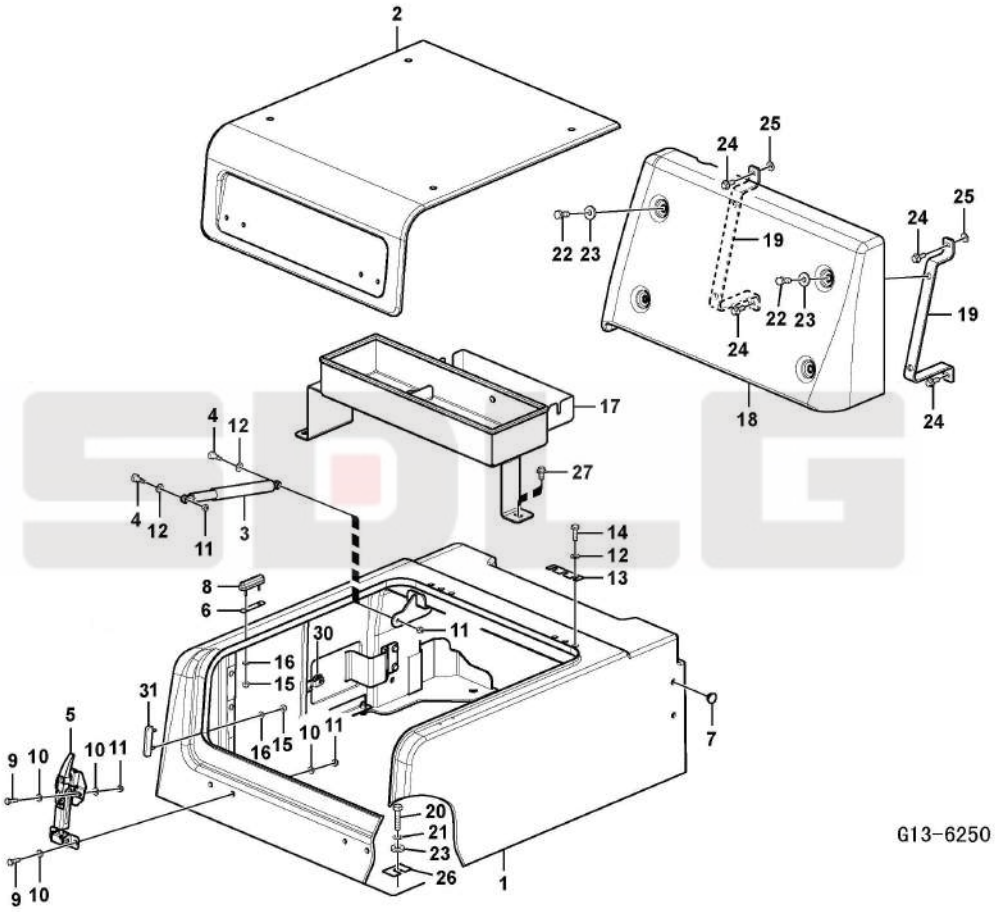
2
25
24
22 23
19
25
24
22 23
19
24
18
24
17
4
12
27
4
12
11
3
14
12
13
8
6
30
11
16
15
31
5
9 10
10 11
16 15
10 11
7
20
21
23
26
1
9 10
G13-6250

Key	Part No.	Description	Spare parts Y/N	Qty	Remarks
31	14400864	Rubber block	Y	2	

Door

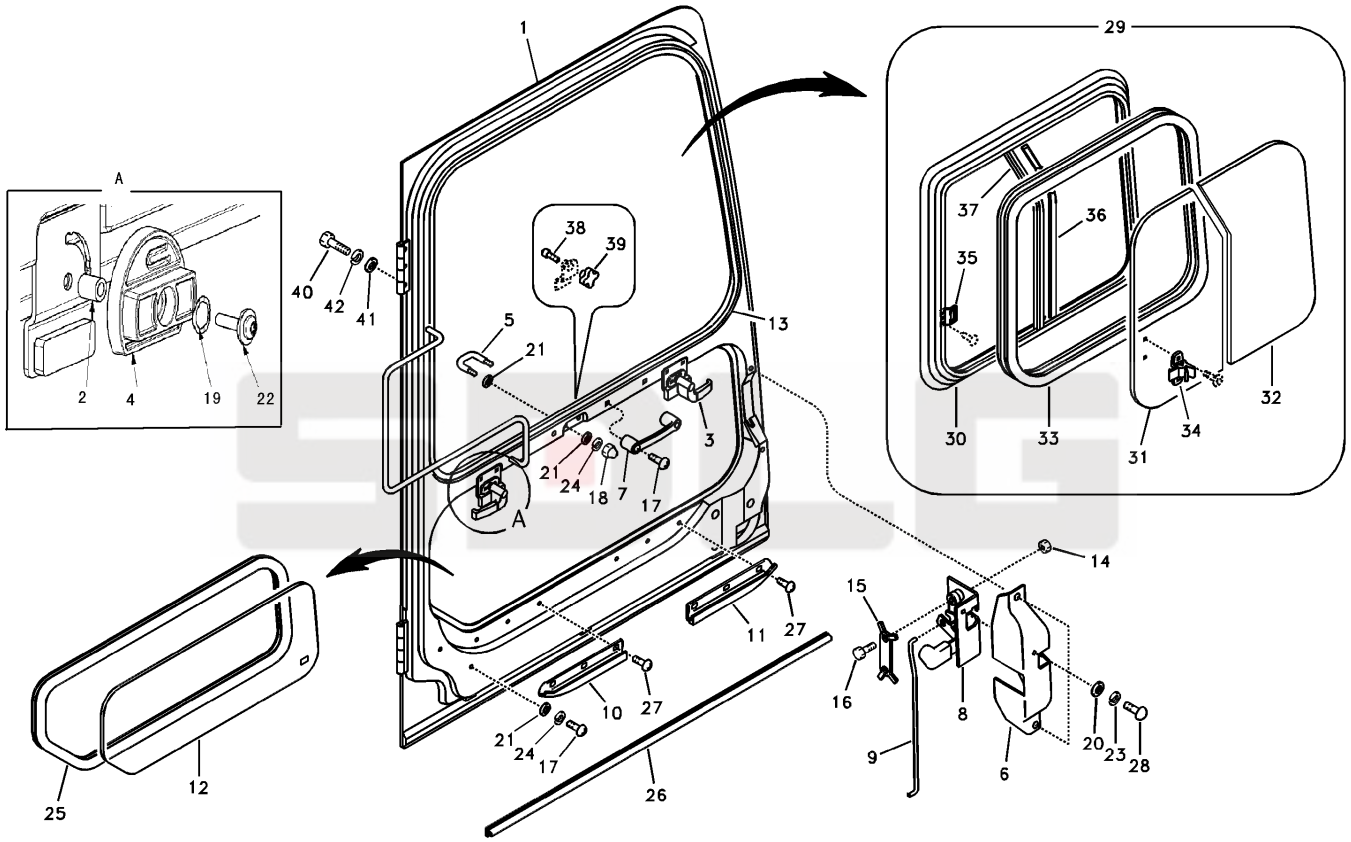
1
29
A
38
39
40
42
41
5
21
13
37
36
35
2
4
19
22
3
21
24
18
7
17
A
30
33
31
34
32
14
15
11
27
16
8
10
27
21
24
17
9
6
20
23
28
26
25
12
G14-6250

Key	Part No.	Description	Spare parts Y/N	Qty	Remarks
1	kongbai	Kongbai	N	1	
2	11214655	Ring	Y	2	
3	11214657	Sponge	Y	1	
4	11214654	Washer	Y	1	
5	11210298	Window catch	Y	1	
6	14401405	Cover	N	1	
7	11210299	Handle	Y	1	
8	11210300	Lock	Y	1	
9	11210301	Rod	Y	1	
10	11210318	Glass holder	Y	1	
11	11210319	Glass holder	Y	1	
12	11211183	Glass	Y	1	
13	11210356	Sealing	Y	1	
14	11210219	Hexagon nut	Y	2	
15	11210452	Locking plate	Y	1	
16	11210093	Hexagon screw	Y	2	
17	11211051	Screw	Y	4	
18	11211039	Nut	Y	2	
19	11214653	Knob	Y	8	
20	11210057	Washer	Y	3	
21	11214768	Washer	N	6	
22	11214656	Six point socket screw	Y	8	
23	11210062	Spring washer	Y	3	
24	11210063	Spring washer	Y	4	
25	11211046	Weatherstrip	Y	1	
26	11210472	Weatherstrip	Y	1	
27	kongbai	Kongbai	N	14	
28	11210087	Six point socket screw	Y	3	
29	11211231	Window	Y	1	
30	11210653	Frame	N	1	

Door

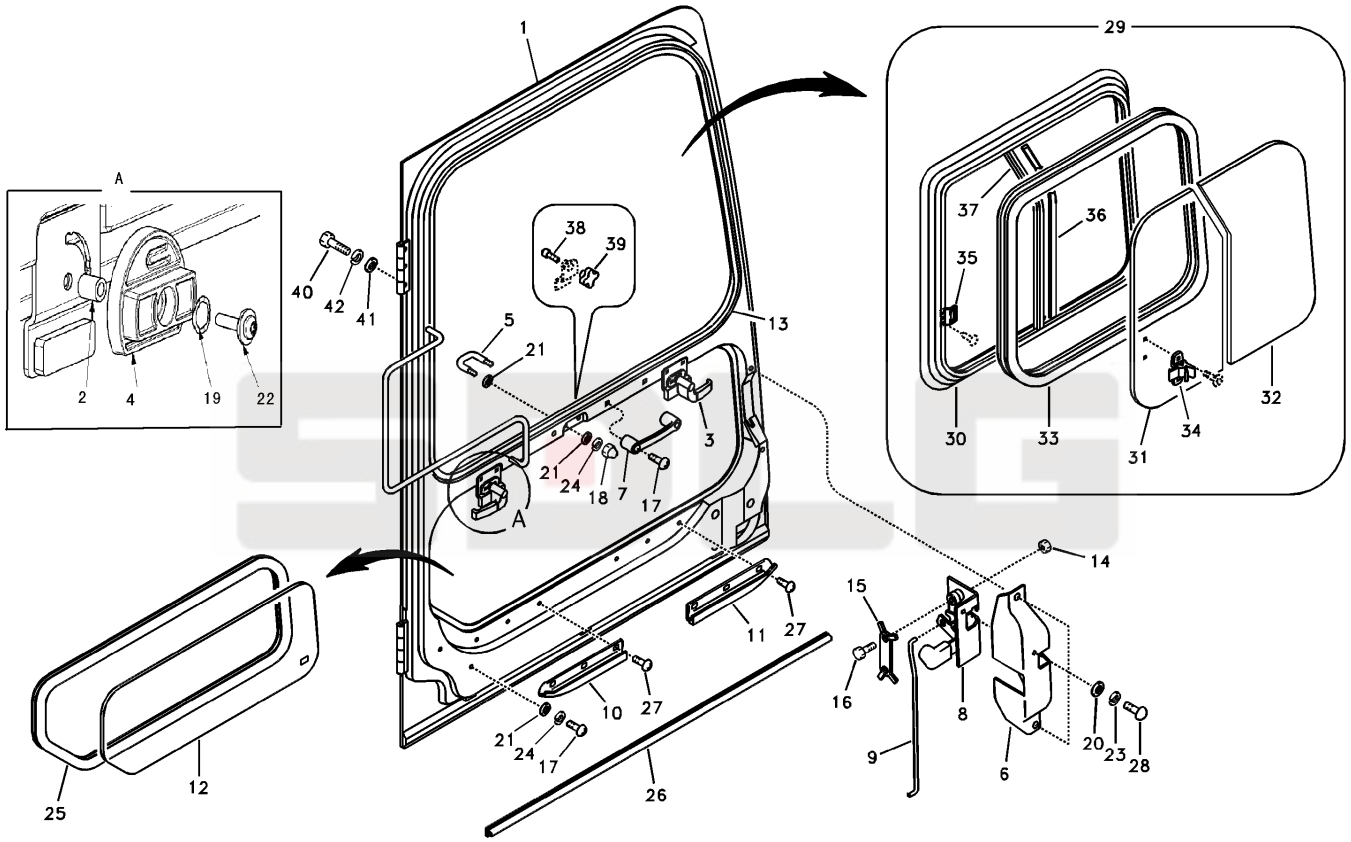
1
29
A
2
4
19
22
40
42
41
38
39
5
21
13
37
36
35
30
33
31
34
32
3
21
24
18
7
17
A
14
15
11
27
16
8
10
27
21
24
17
9
6
20
23
28
25
12
26
G14-6250

Key	Part No.	Description	Spare parts Y/N	Qty	Remarks
31	11211239	Glass	Y	1	
32	11211240	Glass	Y	1	
33	11210518	Weatherstrip	Y	1	
34	11210658	Lock	Y	1	
35	11210655	Lock catch	Y	1	
36	11210470	Sealing	Y	1	
37	11210654	Frame	Y	1	
38	11210656	Rubber stop	Y	1	
39	11210657	Knob	N	1	
40	11210123	Hexagon screw	Y	6	
41	11212281	Washer	Y	6	
42	11210064	Spring washer	Y	6	
43	11214645	Door	N	1	

Cab floor

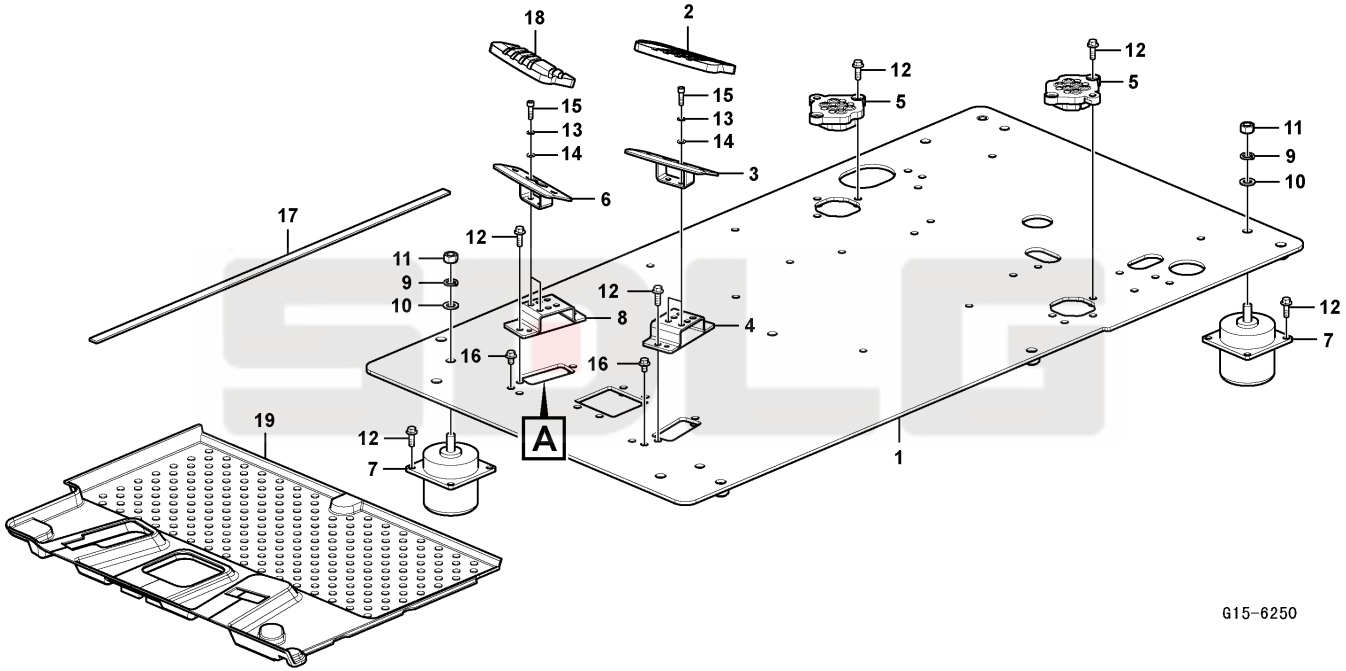
18
2
12
5
12
5
15
13
14
15
13
14
3
6
11
9
10
17
12
11
9
10
12
8
4
12
7
16
16
A
19
12
7
1
G15-6250

Key	Part No.	Description	Spare parts Y/N	Qty	Remarks
1	11212680	Plate	N	1	
2	11216133	Cover	Y	1	
3	14401932	Bracket	Y	1	
4	14401930	Bracket	Y	1	
5	11210279	Sealing	Y	2	
6	14401137	Pedal	Y	1	
7	14401933	Absorber	Y	5	
8	14401138	Bracket	Y	1	
9	11210067	Spring washer	Y	5	
10	11214770	Washer	N	5	
11	11210109	Hexagon nut	Y	5	
12	11210034	Flange screw	Y	28	
13	11210063	Spring washer	Y	2	
14	11214768	Washer	N	2	
15	11210148	Hex. socket screw	Y	2	
16	11210036	Flange screw	Y	4	
17	11210475	Sponge	Y	1	
18	11211208	Rubber mat	N	1	
19	11212912	Floor mat	N	1	

Cover plate

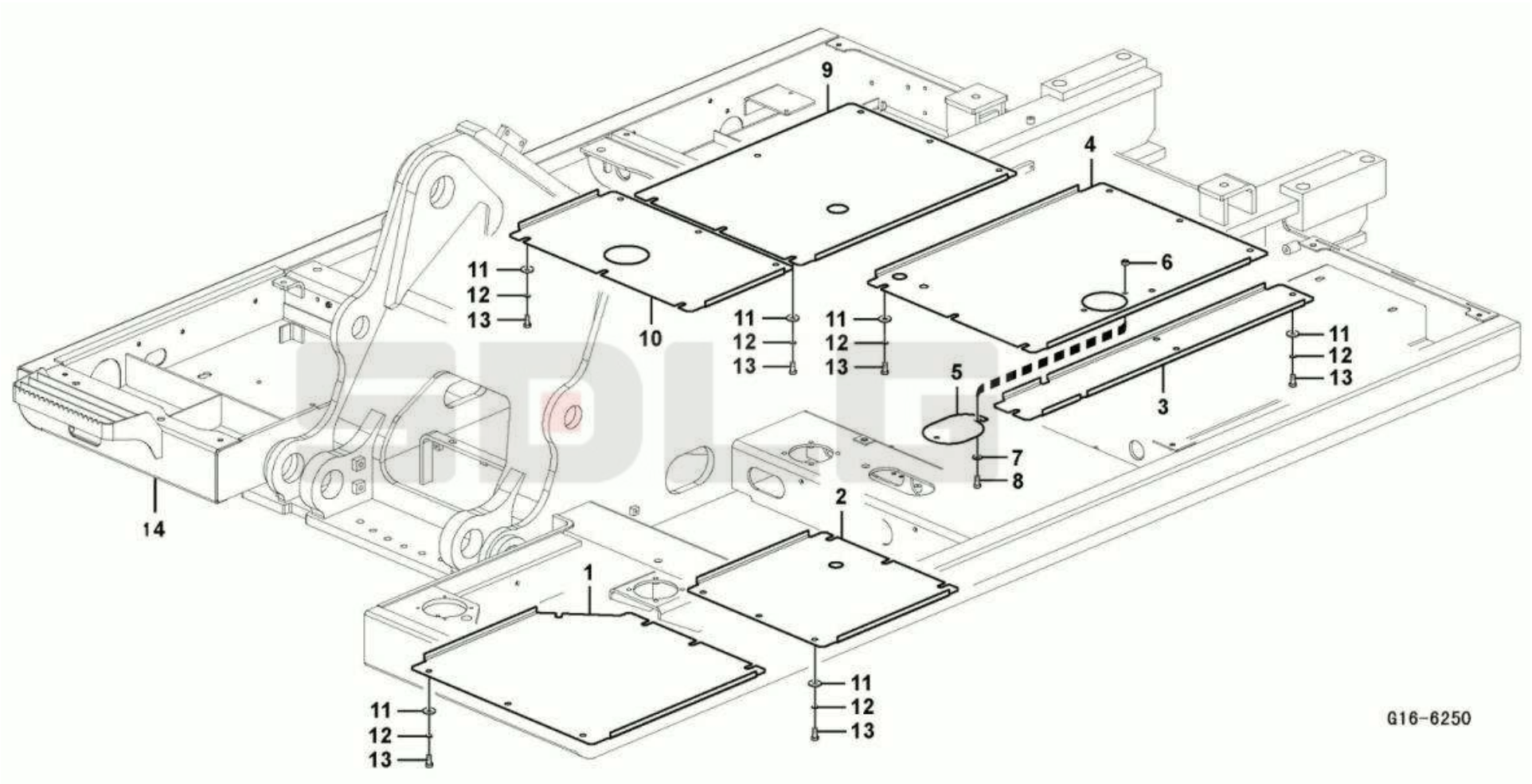

Key	Part No.	Description	Spare parts Y/N	Qty	Remarks
1	11216778	Cover	N	1	
2	11216779	Cover	N	1	
3	kongbai	Kongbai	N	1	
4	11216783	Cover	Y	1	
5	11210750	Plate	Y	1	
6	11211628	Nut	Y	2	
7	11210198	Plain washer	Y	2	
8	11210098	Hexagon screw	Y	2	
9	11216788	Cover	Y	1	
10	11216780	Cover	N	1	
11	11210695	Washer	Y	38	
12	11210065	Spring washer	Y	38	
13	11210098	Hexagon screw	Y	38	
14	26240013154	Superstructure frame	N	1	

Rear view mirror

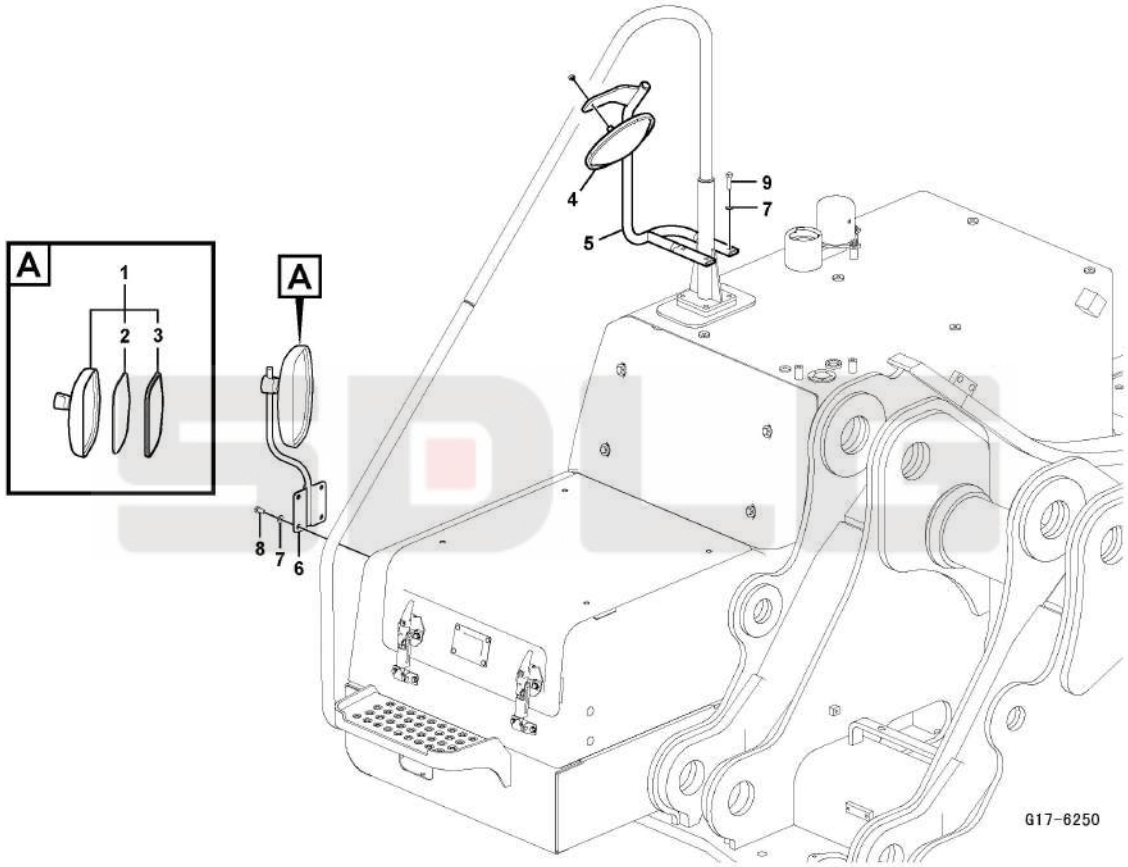

Key	Part No.	Description	Spare parts Y/N	Qty	Remarks
1	14401885	Mirror	N	1	
2	4190001779	Rear view mirror	N	1	
3	kongbai	Kongbai	N	1	
4	11211277	Rear view mirror	N	1	
5	11216686	Stay	N	1	
6	14401304	Mirror brace	Y	1	
7	11210197	Plain washer	Y	6	
8	11210123	Hexagon screw	Y	4	
9	11210124	Hexagon screw	Y	2	

Rear view mirror

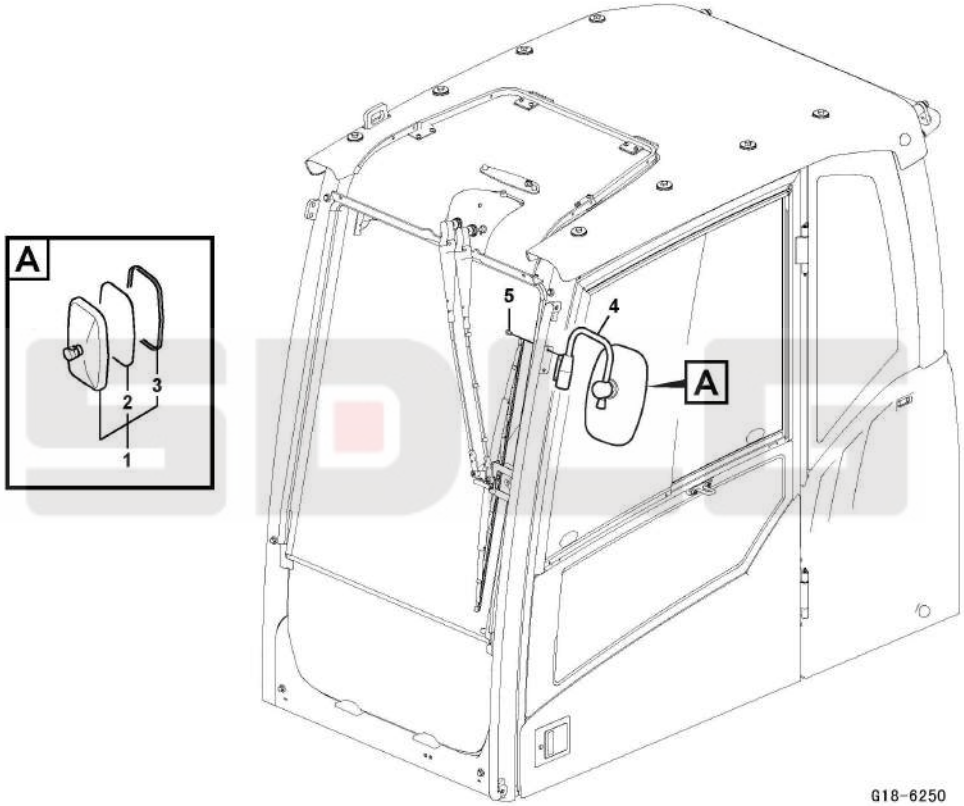

Key	Part No.	Description	Spare parts Y/N	Qty	Remarks
1	14401885	Mirror	N	1	
2	4190001779	Rear view mirror	N	1	
3	kongbai	Kongbai	N	1	
4	14401886	Mirror brace	N	1	
5	11210033	Flange screw	Y	2	

Cab window

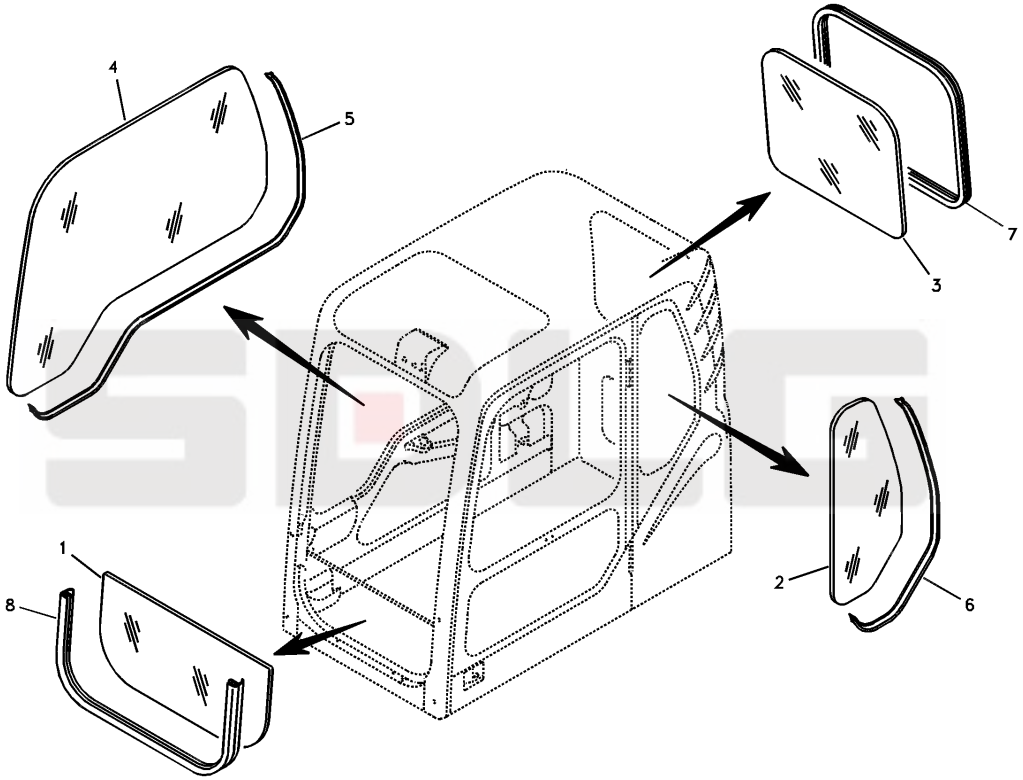

G19-6250

Key	Part No.	Description	Spare parts Y/N	Qty	Remarks
1	11211168	Glass	N	1	
2	11211184	Glass	Y	1	
3	11211185	Glass	N	1	
4	11211186	Glass	Y	1	
5	11211048	Weatherstrip	Y	1	
6	11211045	Weatherstrip	Y	1	
7	11211047	Weatherstrip	Y	1	
8	11210517	Weatherstrip	Y	1	

Windshield

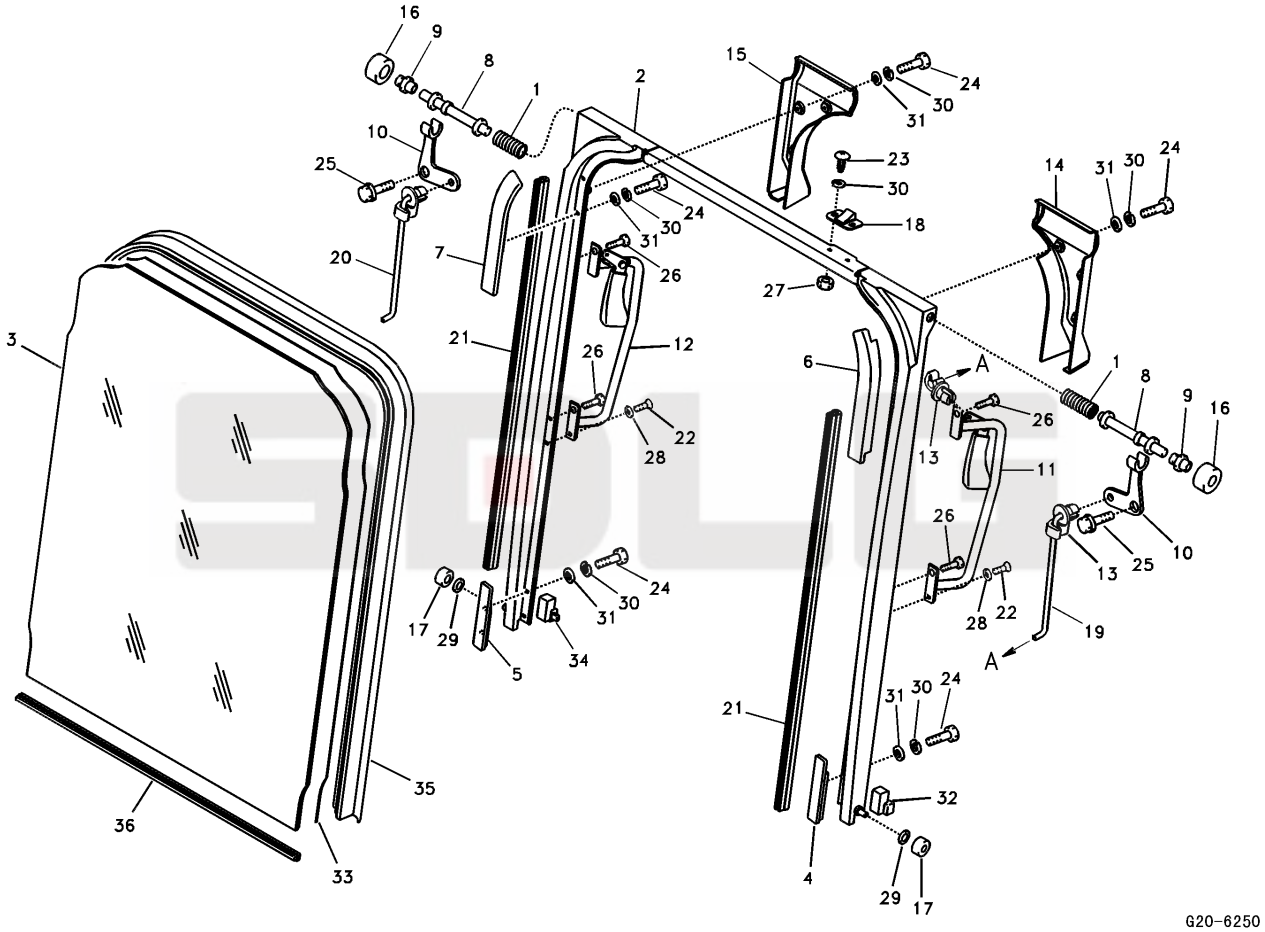
16
9
8
1
2
15
24
30
31
10
25
23
30
18
14
31
30
24
24
30
31
26
20
7
27
3
21
26
12
6
A
1
8
9
16
26
22
28
13
11
26
10
25
13
24
30
31
17
29
5
34
28
22
19
A
21
31
30
24
32
35
36
33
4
29
17
G20-6250

Key	Part No.	Description	Spare parts Y/N	Qty	Remarks
1	11210572	Spring	Y	2	
2	11210306	Shield	N	1	
3	11211163	Glass	Y	1	
4	11210307	Block	Y	1	
5	11210308	Block	Y	1	
6	11210309	Block	Y	1	
7	11210310	Block	Y	1	
8	11210755	Pin	Y	2	
9	11210311	Bushing	Y	2	
10	11210312	Connecting lever	Y	2	
11	11211214	Handle	N	1	
12	11211215	Handle	N	1	
13	11210313	Connector	Y	4	
14	11210314	Cover	N	1	
15	11210315	Cover	N	1	
16	11210582	Roller	N	2	
17	11210583	Roller	N	2	
18	11210316	Stop sleeve	N	1	
19	11210332	Rod	Y	1	
20	11210333	Rod	Y	1	
21	11210343	Weatherstrip	Y	2	
22	11210089	Six point socket screw	Y	2	
23	11210084	Six point socket screw	Y	2	
24	11210085	Six point socket screw	Y	14	
25	11210074	Flange screw	Y	2	
26	11210095	Hexagon screw	Y	4	
27	11211038	Nut	Y	2	
28	11211040	Washer	Y	2	
29	11214768	Washer	N	2	
30	11210061	Spring washer	Y	16	

Windshield

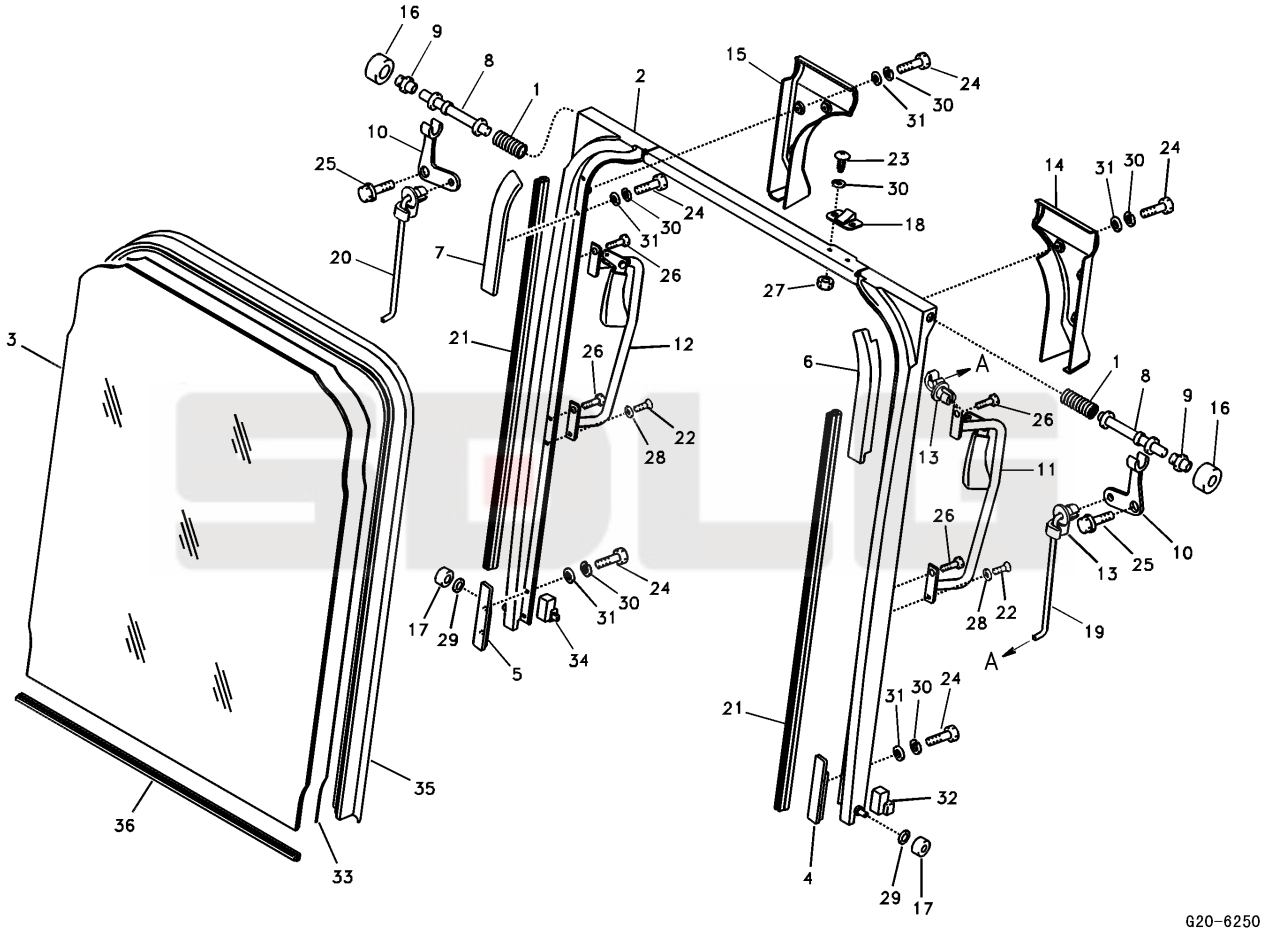
16
9
8
1
2
15
24
30
31
10
25
23
30
18
14
31
30
24
24
30
31
26
20
7
27
3
21
26
12
6
A
1
8
9
16
26
22
28
13
11
26
10
25
13
24
30
31
17
29
5
34
28
22
19
A
21
31
30
24
32
36
35
33
4
29
17
G20-6250

Key	Part No.	Description	Spare parts Y/N	Qty	Remarks
31	11214752	Washer	N	14	
32	11210515	Plug	Y	1	
33	11210500	Rubber moulding	Y	1	
34	11210516	Plug	Y	1	
35	11210346	Weatherstrip	Y	1	
36	11210406	Backing bar	Y	1	
37	11214644	Shield	N	1	

Driver seat

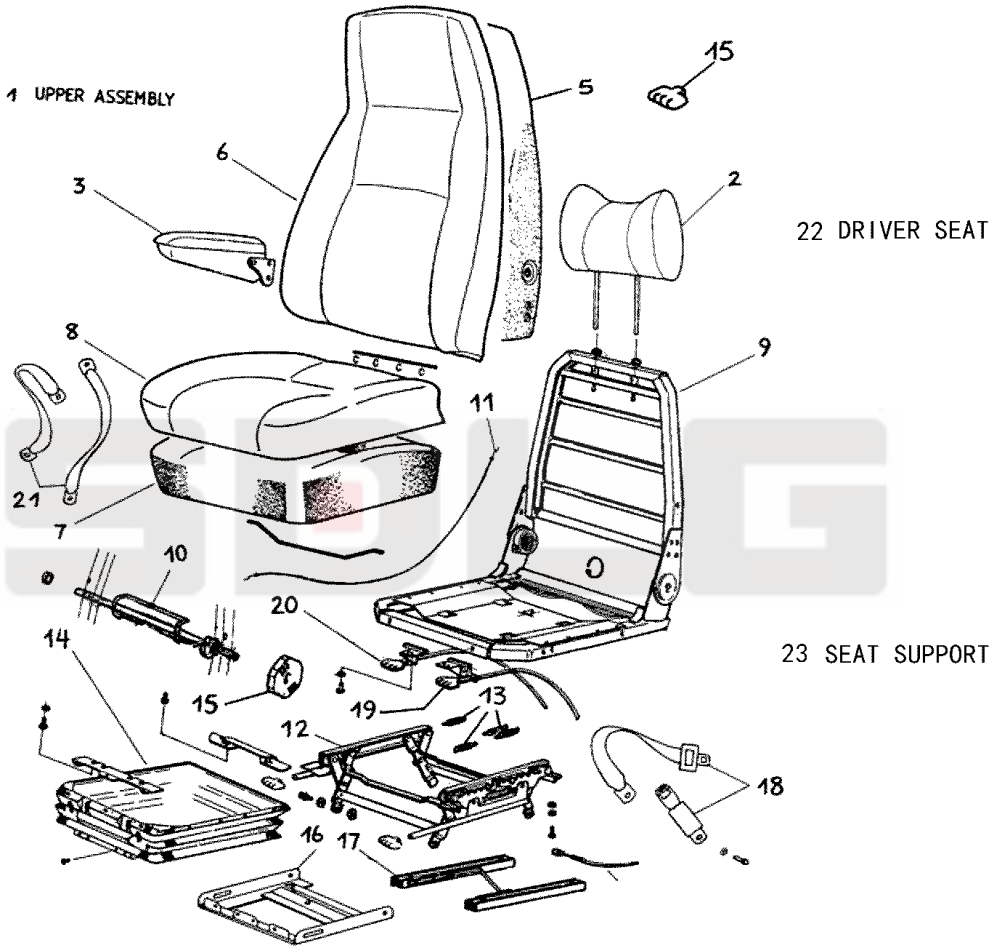
1 UPPER ASSEMBLY
22 DRIVER SEAT
23 SEAT SUPPORT
1
2
3
5
6
7
8
9
10
11
12
13
14
15
16
17
18
19
20
21

Key	Part No.	Description	Spare parts Y/N	Qty	Remarks
1	4190003559001	Cover, upper	Y	1	
2	4190003559002	Head restraint	Y	1	
3	4190003559003	Arm rest	Y	1	
4	4190003559004	Arm rest	Y	1	
5	4190003559005	Support	Y	1	
6	4190003559006	Seat cushion	Y	1	
7	4190003559007	Support	Y	1	
8	4190003559008	Seat cushion	Y	1	
9	4190003559009	Frame	Y	1	
10	4190003559010	Support	Y	1	
11	4190003559011	Cable	Y	1	
12	4190003559012	Adjuster kit	Y	1	
13	4190003559013	Adjusting spring	Y	1	
14	4190003559014	Cover	Y	1	
15	4190003559015	Control knob	Y	1	
16	4190003559016	Pad	Y	1	
17	4190003559017	Adjuster kit	Y	1	
18	4190003559018	Belt	Y	1	
19	4190003559019	Lever kit	Y	1	
20	4190003559020	Lever kit	Y	1	
21	4190003559021	Belt	Y	1	
22	11216664	Driver s seat	N	1	
23	11210533	Seat support	N	1	

Sun visor

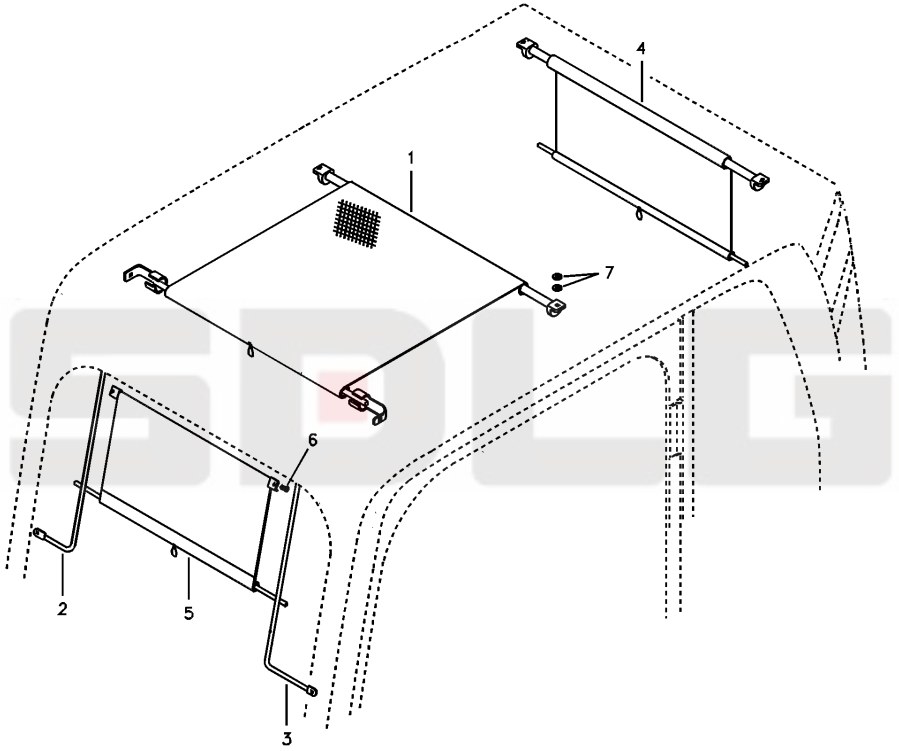

G22-6250

Key	Part No.	Description	Spare parts Y/N	Qty	Remarks
1	11210662	Sun visor	N	1	
2	11210348	Guide	Y	1	
3	11210349	Guide	Y	1	
4	11210661	Sun visor	N	1	
5	11210454	Sun visor	N	1	
6	11211616	Cross recessed screw	Y	2	
7	11214768	Washer	N	4	

Sun visor

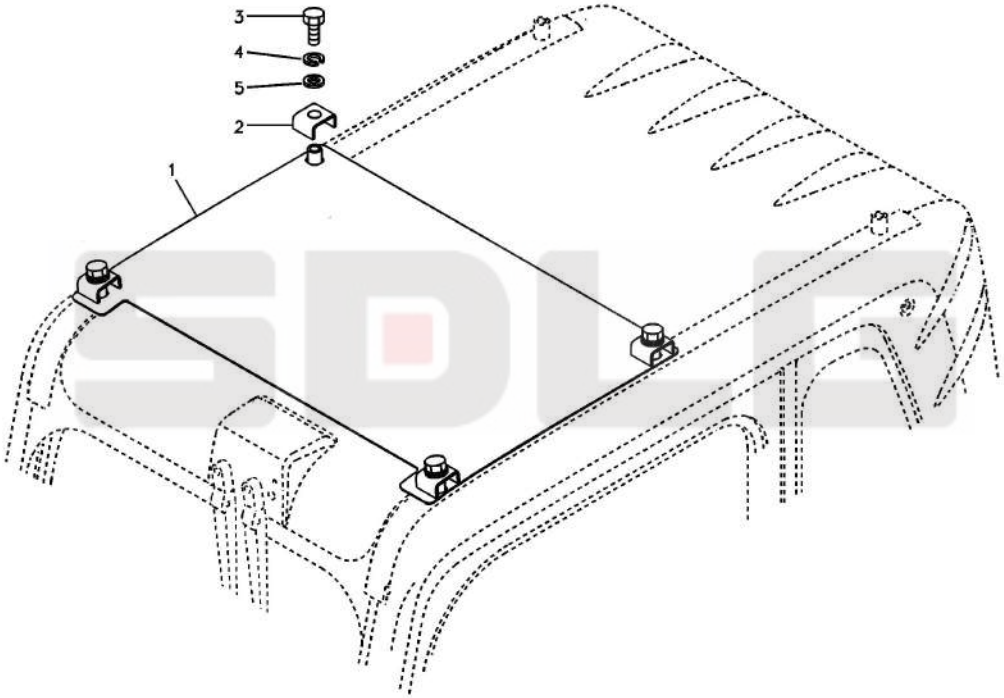

G23-6250

Key	Part No.	Description	Spare parts Y/N	Qty	Remarks
1	11217543	Cover	Y	1	
2	11216137	Plate	N	4	
3	11210099	Hexagon screw	Y	4	
4	11210065	Spring washer	Y	4	
5	11210538	Washer	Y	4	

Hose assembly

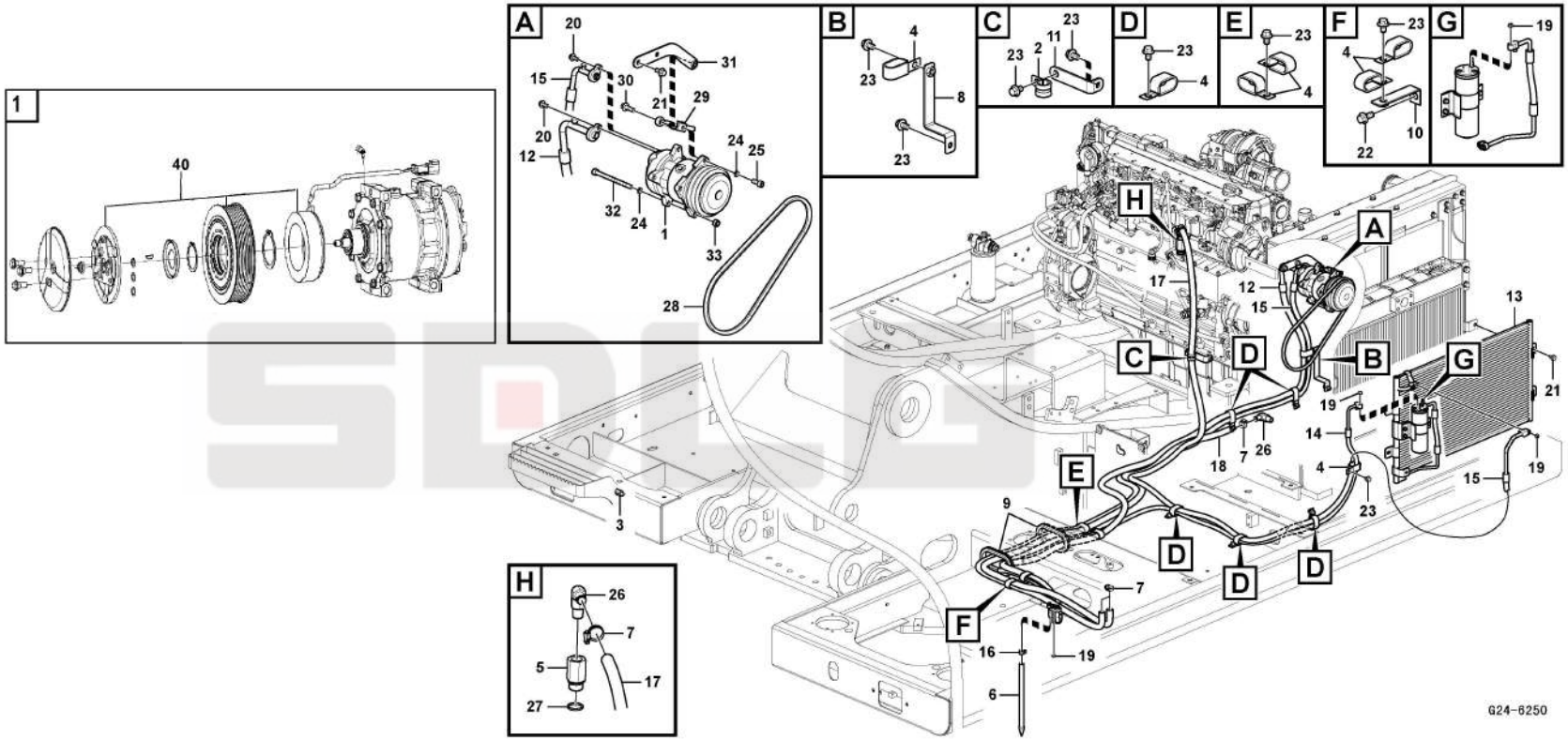

Key	Part No.	Description	Spare parts Y/N	Qty	Remarks
1	11212853	Compressor	N	1	
2	11210258	Clip	Y	2	
3	11210286	Sensor	Y	1	
4	11210324	Clip	N	10	
5	11210900	Connector	Y	1	
6	11210410	Drain hose	Y	1	
7	11210413	Clamp	N	4	
8	11219635	Bracket	Y	1	
9	11210603	Grommet	Y	2	
10	11210613	Bracket	Y	1	
11	11210741	Bracket	Y	1	
12	11212710	Hose	Y	1	
13	11214356	Condenser	Y	1	
14	11214357	Hose	Y	1	
15	11212709	Hose	N	1	
16	11211060	Clip	Y	1	
17	11212713	Hose	Y	1	
18	11212712	Hose	Y	1	
19	11210029	Flange nut	Y	4	
20	11210031	Flange screw	Y	2	
21	11210034	Flange screw	Y	11	
22	11210032	Flange screw	Y	1	
23	11210036	Flange screw	Y	12	
24	11210064	Spring washer	Y	2	
25	11210150	Hex. socket screw	Y	1	
26	11210896	Nipple	Y	2	
27	11212714	Gasket	N	1	
28	11217509	V-belt	N	1	
29	11210794	Tensioner	Y	1	
30	11210034	Flange screw	Y	1	

Hose assembly

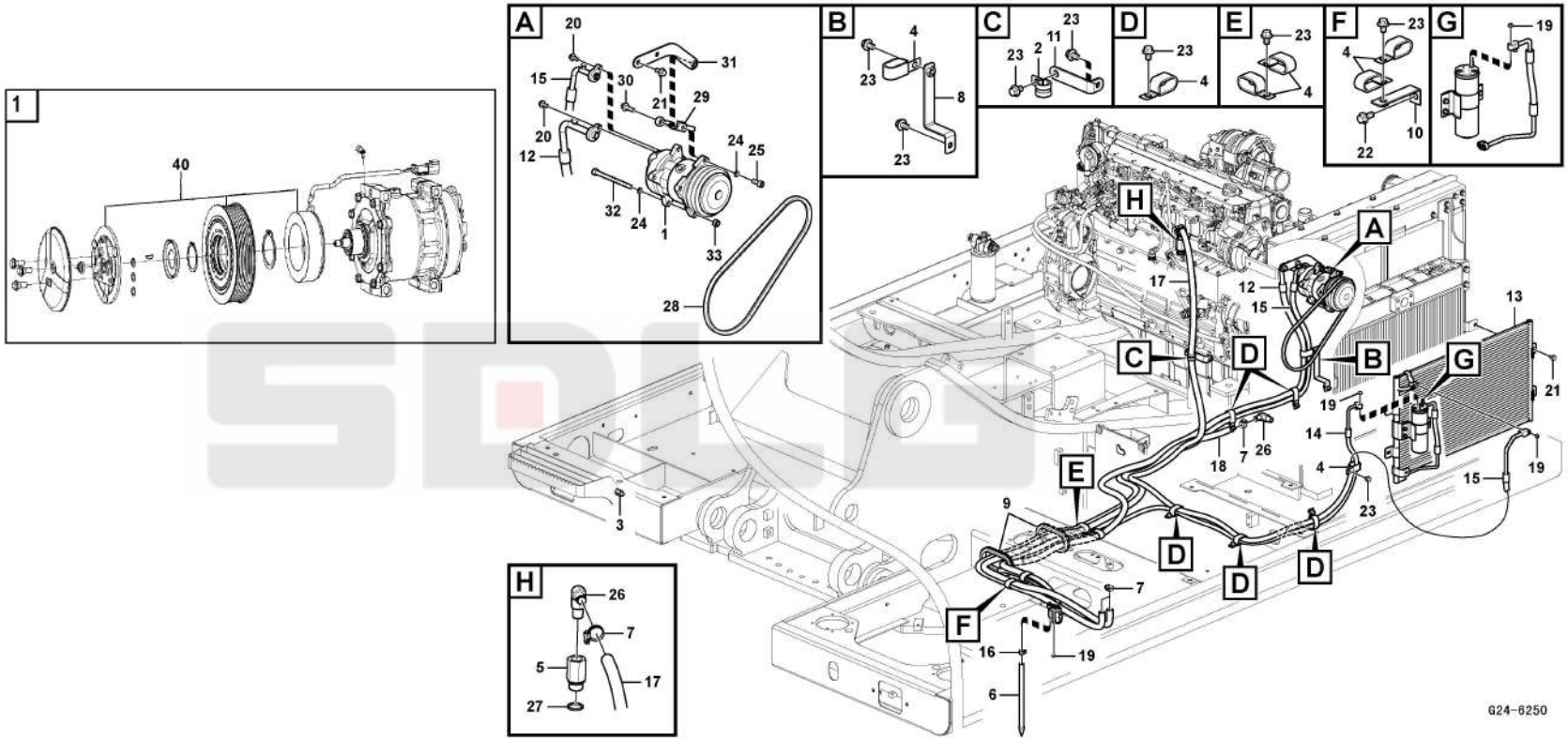

Key	Part No.	Description	Spare parts Y/N	Qty	Remarks
31	11212716	Bracket	N	1	
32	11210205	Hex. socket screw	Y	1	
33	11210115	Lock nut	Y	1	
34	11210602	O-ring	Y	1	
35	11212707	Hose	Y	1	
36	11210396	Receiver dryer	Y	1	
37	11212708	Switch	N	1	
38	11210600	O-ring	Y	1	
39	11210601	O-ring	Y	1	
40	11219846	Clutch	Y	1	

Air duct

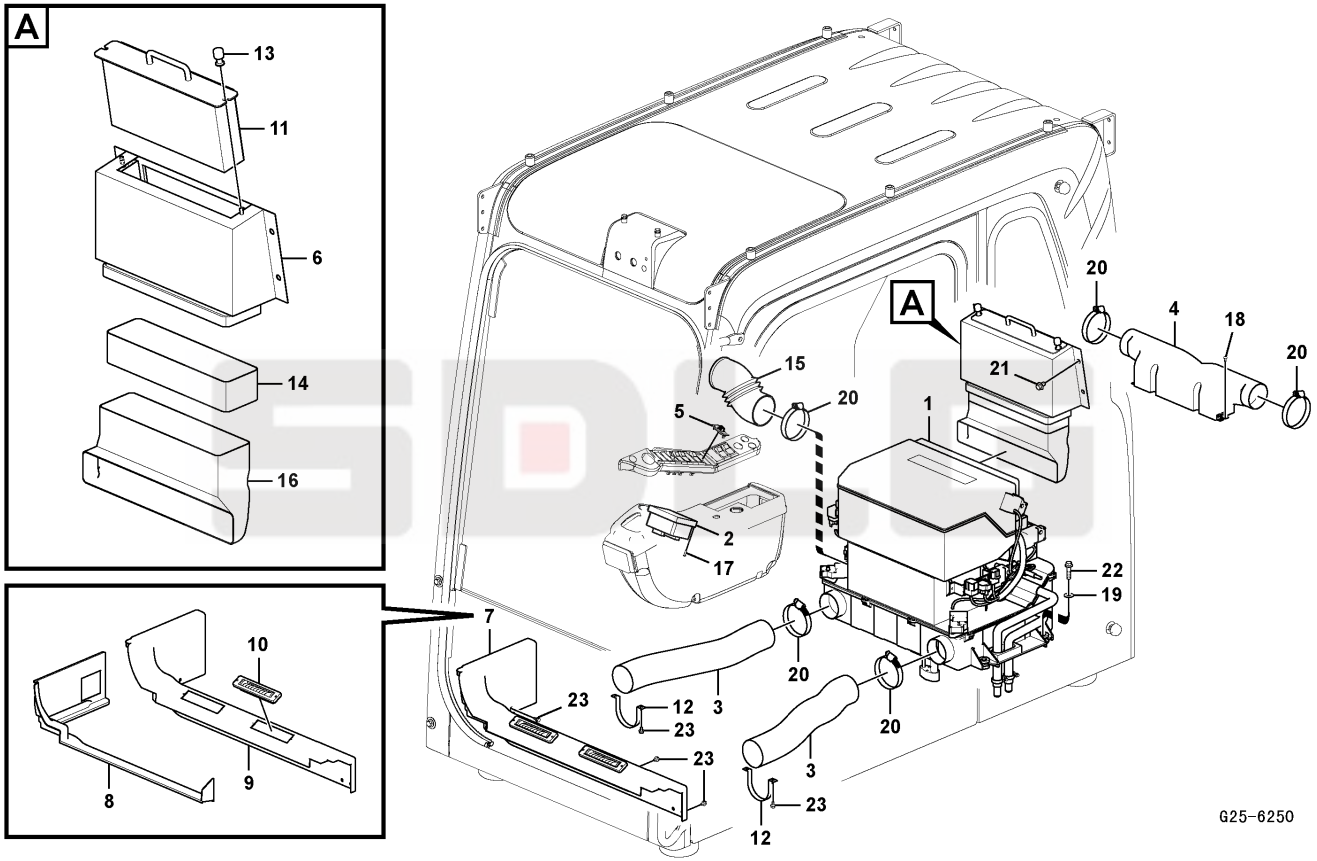
A
13
11
6
14
16
10
8
9
7
23
12
3
23
23
3
23
12
20
20
20
A
20
4
18
20
21
15
20
5
1
2
17
22
19
G25-6250

Key	Part No.	Description	Spare parts Y/N	Qty	Remarks
1	11219755	Air conditioning unit	N	1	
2	11214504	Control	N	1	
3	11210266	Hose	N	2	
4	11210267	Duct	Y	1	
5	11210456	Sensor	Y	1	
6	14401943	Case	N	1	
7	11217781	Cover	Y	1	
8	11212914	Defroster duct	N	1	
9	11211196	Cover	N	1	
10	11210496	Grille	Y	2	
11	11211156	Filter	N	1	
12	11210282	Bracket	Y	2	
13	11210283	Knob	N	2	
14	11210285	Grommet	Y	1	
15	11210287	Hose	Y	1	
16	11210277	Duct	Y	1	
17	11211620	Cross recessed screw	Y	4	
18	11211621	Cross recessed screw	Y	4	
19	11211641	Washer	Y	4	
20	11211644	Clamp	N	5	
21	11210036	Flange screw	Y	4	
22	11210077	Flange screw	Y	4	
23	11210074	Flange screw	Y	8	

Air conditioning system

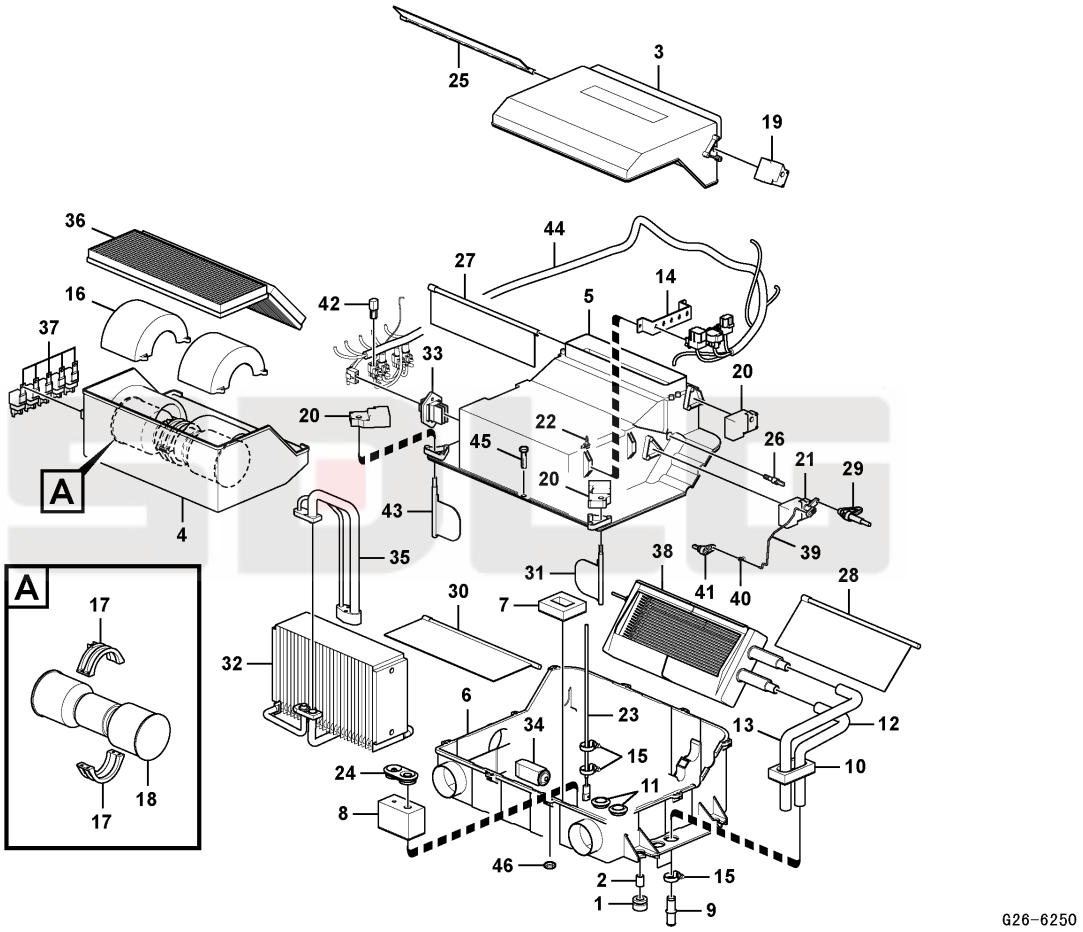

Key	Part No.	Description	Spare parts Y/N	Qty	Remarks
1	11210466	Bushing	Y	4	
2	kongbai	Kongbai	N	4	
3	11210369	Cover	Y	1	
4	11210368	Case	Y	1	
5	11219756	Case	N	1	
6	11219761	Case	Y	1	
7	11219759	Gasket	Y	1	
8	11219758	Gasket	Y	1	
9	11210390	Connector	N	2	
10	11219757	Gasket	Y	1	
11	kongbai	Kongbai	N	2	
12	11210388	Hose	Y	1	
13	11210389	Hose	Y	1	
14	kongbai	Kongbai	N	2	
15	11210413	Clamp	N	4	
16	kongbai	Kongbai	N	2	
17	11210383	Guide	Y	2	
18	11212719	Blower motor	Y	1	
19	11214372	Actuator	Y	1	
20	11214371	Actuator	Y	3	
21	kongbai	Kongbai	N	1	
22	kongbai	Kongbai	N	1	
23	11210379	Sensor	N	1	
24	11210378	Grommet	Y	1	
25	11210377	Door	Y	1	
26	11210376	Control lever	Y	1	
27	11210375	Door	Y	1	
28	11210372	Door	Y	1	
29	11210373	Connecting lever	Y	1	
30	11210394	Door	Y	1	

Air conditioning system

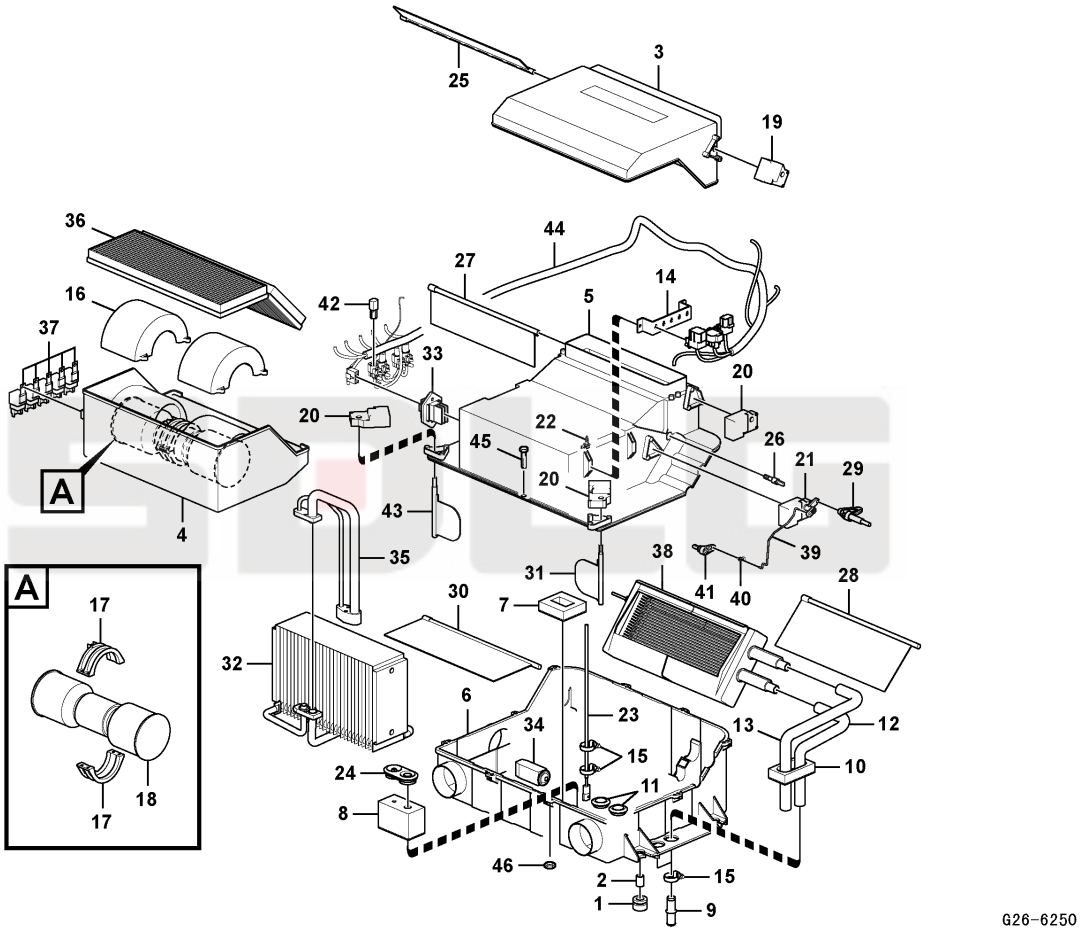

Key	Part No.	Description	Spare parts Y/N	Qty	Remarks
31	11210395	Door	Y	1	
32	11214375	Cooling system	Y	1	
33	11214373	Resistor	Y	1	
34	11210370	Expansion valve	Y	1	
35	11214374	Pipe	Y	1	
36	11211170	Filter	N	1	
37	11212720	Relay	Y	5	
38	11210698	Radiator	Y	1	
39	11210384	Rod	Y	1	
40	11210385	Rod	Y	1	
41	11210374	Control lever	Y	1	
42	11210608	Diode	Y	1	
43	11210371	Door	Y	1	
44	11219760	Wiring harness	Y	1	
45	11212723	Bolt	Y	15	
46	11212722	Nut	Y	15	
47	11210543	Actuator	Y	1	
48	11210544	Control lever	Y	1	
49	11210697	Radiator	Y	1	
50	11212721	Sensor	Y	1	

Instruction panel assembly

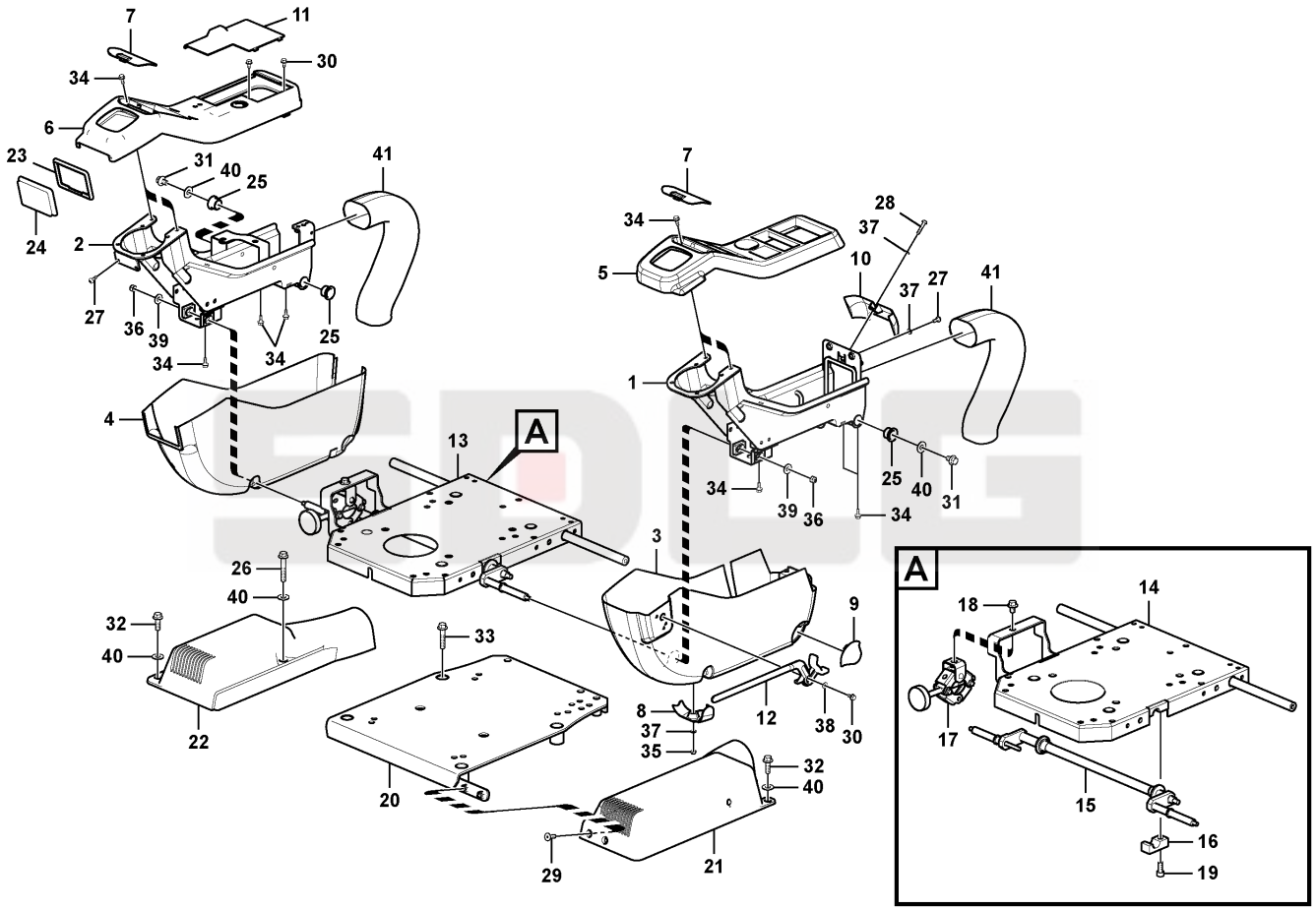

Key	Part No.	Description	Spare parts Y/N	Qty	Remarks
1	11214476	Support	Y	1	
2	11210885	Support	N	1	
3	11219169	Cover	Y	1	
4	11217784	Cover	Y	1	
5	11219170	Cover	Y	1	
6	11217787	Cover	Y	1	
7	14401398	Clip	Y	2	
8	14401401	Clip	Y	1	
9	14401402	Clip	Y	1	
10	11218471	Cover plate	Y	1	
11	11212907	Cover	Y	1	
12	11210341	Lock hand lever	Y	1	
13	11210342	Support	Y	1	
14	kongbai	Kongbai	N	1	
15	kongbai	Kongbai	N	1	
16	kongbai	Kongbai	N	2	
17	11212724	Control lever	Y	1	
18	11210036	Flange screw	Y	1	
19	11210147	Hex. socket screw	Y	2	
20	11210344	Support	Y	1	
21	11217785	Cover	Y	1	
22	11217786	Cover	Y	1	
23	11210345	Sealing	Y	1	
24	14401937	Ashtray	Y	1	
25	11210546	Bushing	Y	4	
26	11210079	Flange screw	Y	1	
27	11210088	Six point socket screw	Y	4	
28	11210090	Six point socket screw	Y	1	
29	11210096	Screw	Y	2	
30	11210074	Flange screw	Y	3	

Instruction panel assembly

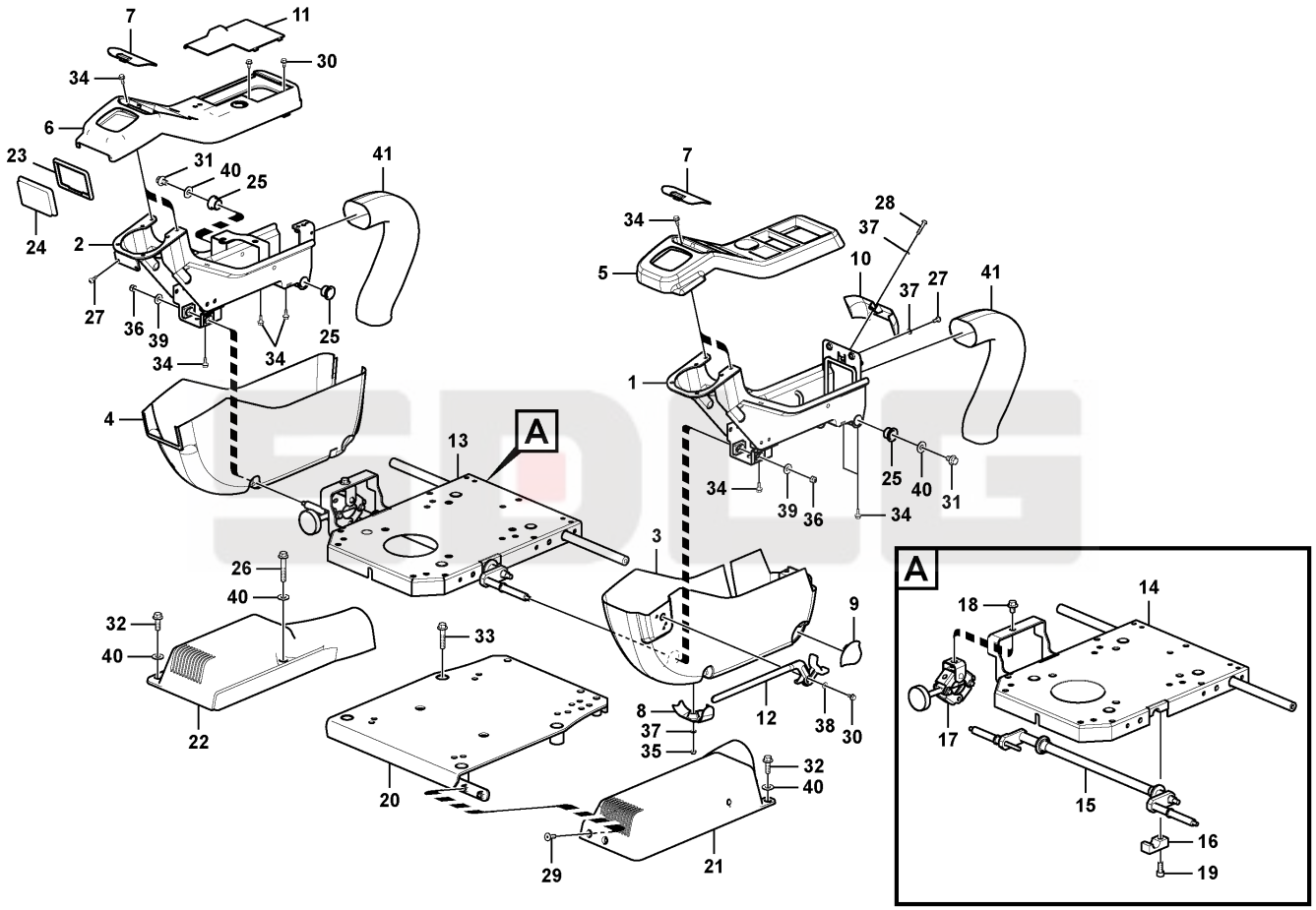

Key	Part No.	Description	Spare parts Y/N	Qty	Remarks
31	11210036	Flange screw	Y	2	
32	11210034	Flange screw	Y	3	
33	11210078	Flange screw	Y	4	
34	11210038	Flange screw	Y	10	
35	11211052	Lock nut	Y	1	
36	11211053	Lock nut	Y	2	
37	11210057	Washer	Y	4	
38	11211640	Washer	Y	1	
39	11214740	Washer	Y	2	
40	11211641	Washer	Y	6	
41	11210474	Cover	Y	2	

Instruction panel assembly

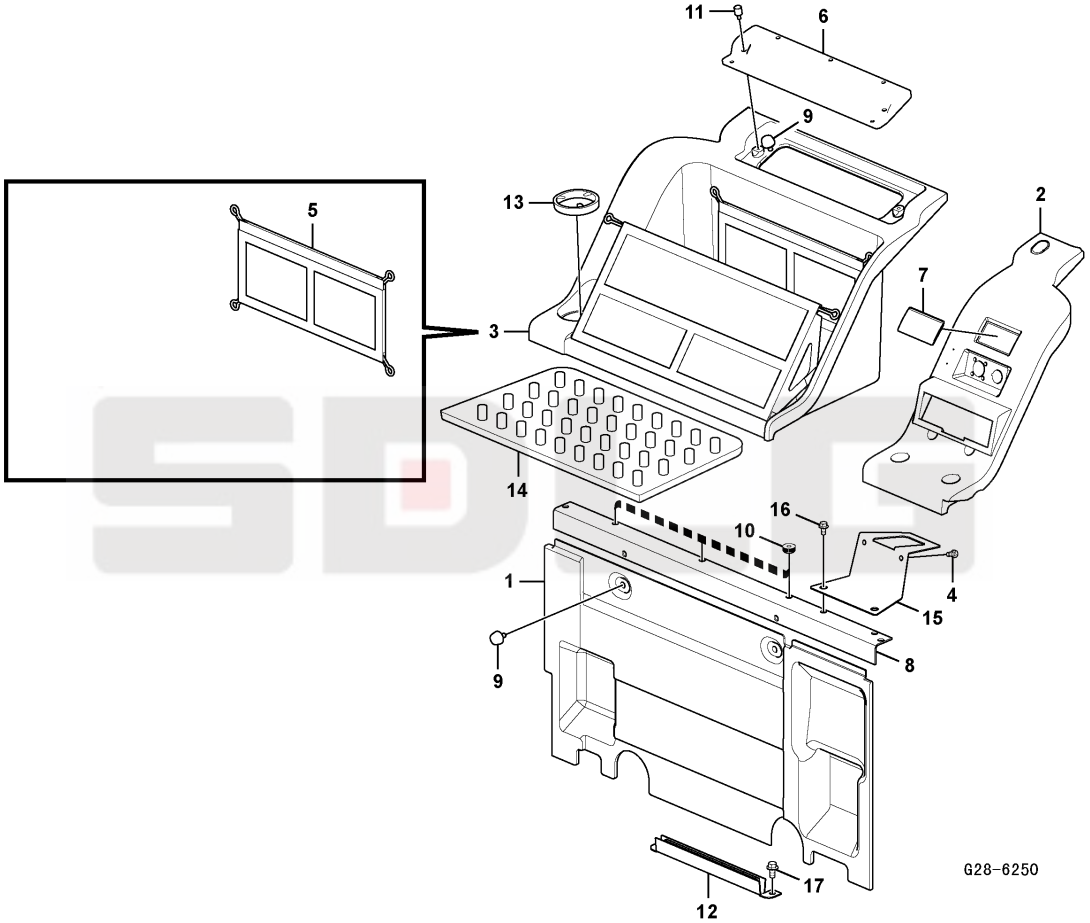

Key	Part No.	Description	Spare parts Y/N	Qty	Remarks
1	11217782	Cover	Y	1	
2	11217783	Cover	Y	1	
3	11217780	Cover	Y	1	
4	11210117	Hexagon screw	Y	2	
5	11210650	Net	Y	1	
6	14401400	Cover	Y	1	
7	14401399	Cover	Y	1	
8	11219620	Support	N	1	
9	11210335	Knob	Y	4	
10	11210336	Knob	Y	3	
11	11210337	Knob	Y	2	
12	11219621	Socket	N	1	
13	11210339	Cup holder	Y	1	
14	11212910	Floor mat	Y	1	
15	11210545	Support	Y	1	
16	11210033	Flange screw	Y	5	
17	11210034	Flange screw	Y	2	

Slip protection

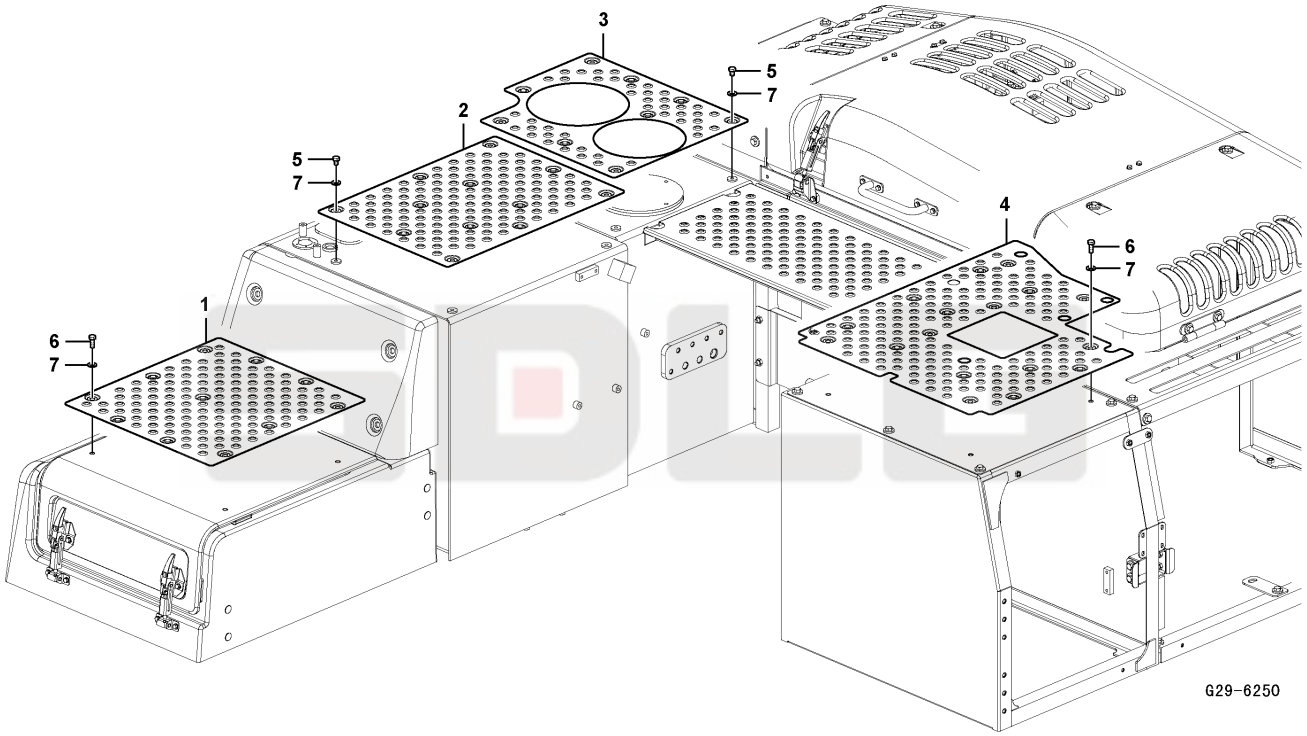

Key	Part No.	Description	Spare parts Y/N	Qty	Remarks
1	kongbai	Kongbai	N	1	
2	11216729	Slip protection	N	1	
3	11216730	Slip protection	N	1	
4	kongbai	Kongbai	N	1	
5	11210188	Hexagon screw	Y	8	
6	11210098	Hexagon screw	Y	11	
7	11210198	Plain washer	Y	19	

Tool kit

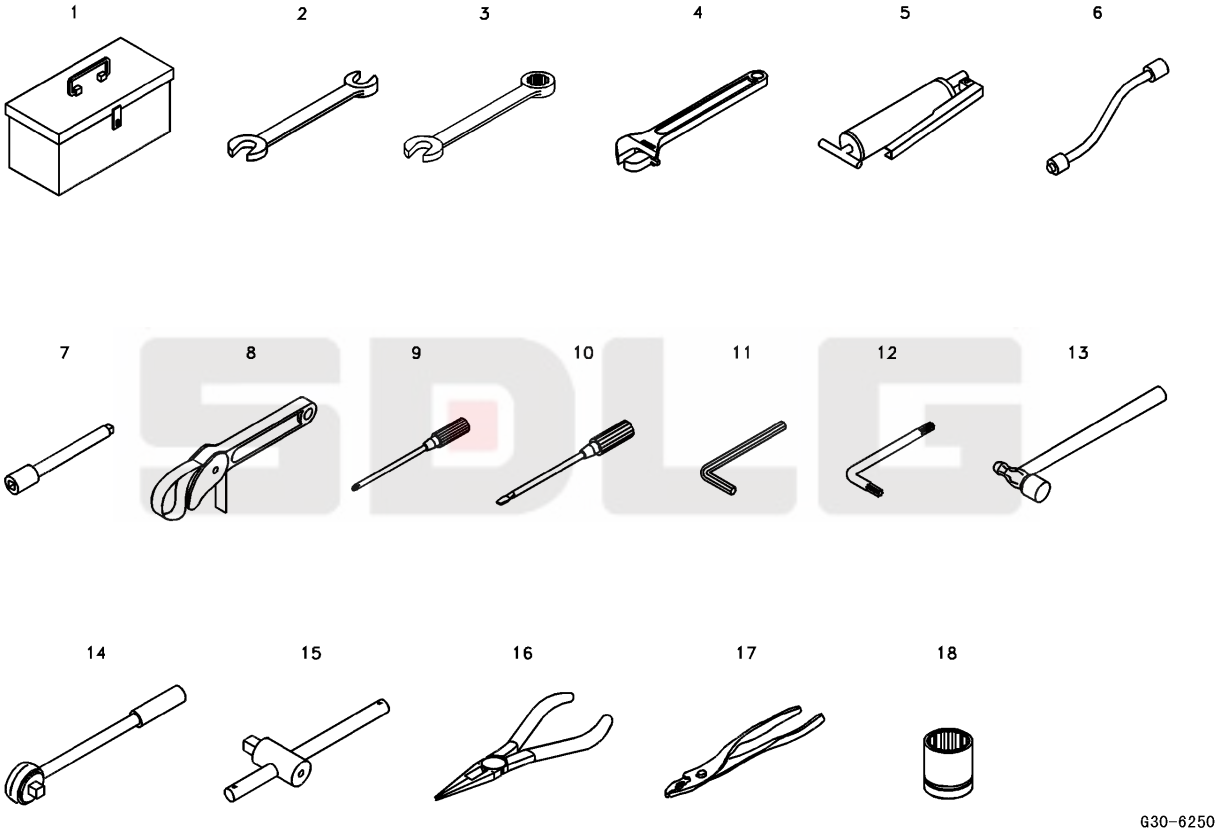

Key	Part No.	Description	Spare parts Y/N	Qty	Remarks
1	14402111	Tool box	N	1	
2	kongbai	Kongbai	N	1	
3	kongbai	Kongbai	N	1	
4	kongbai	Kongbai	N	1	
5	11211092	Grease gun	Y	1	
6	kongbai	Kongbai	N	1	
7	kongbai	Kongbai	N	1	
8	11211118	Wrench	N	1	
9	kongbai	Kongbai	N	1	
10	kongbai	Kongbai	N	1	
11	kongbai	Kongbai	N	1	
12	kongbai	Kongbai	N	1	
13	kongbai	Kongbai	N	1	
14	kongbai	Kongbai	N	1	
15	11211094	Handle	N	1	
16	kongbai	Kongbai	N	1	
17	kongbai	Kongbai	N	1	
18	kongbai	Kongbai	N	1	
19	14400275	Tool kit	N	1	

Sign and logo

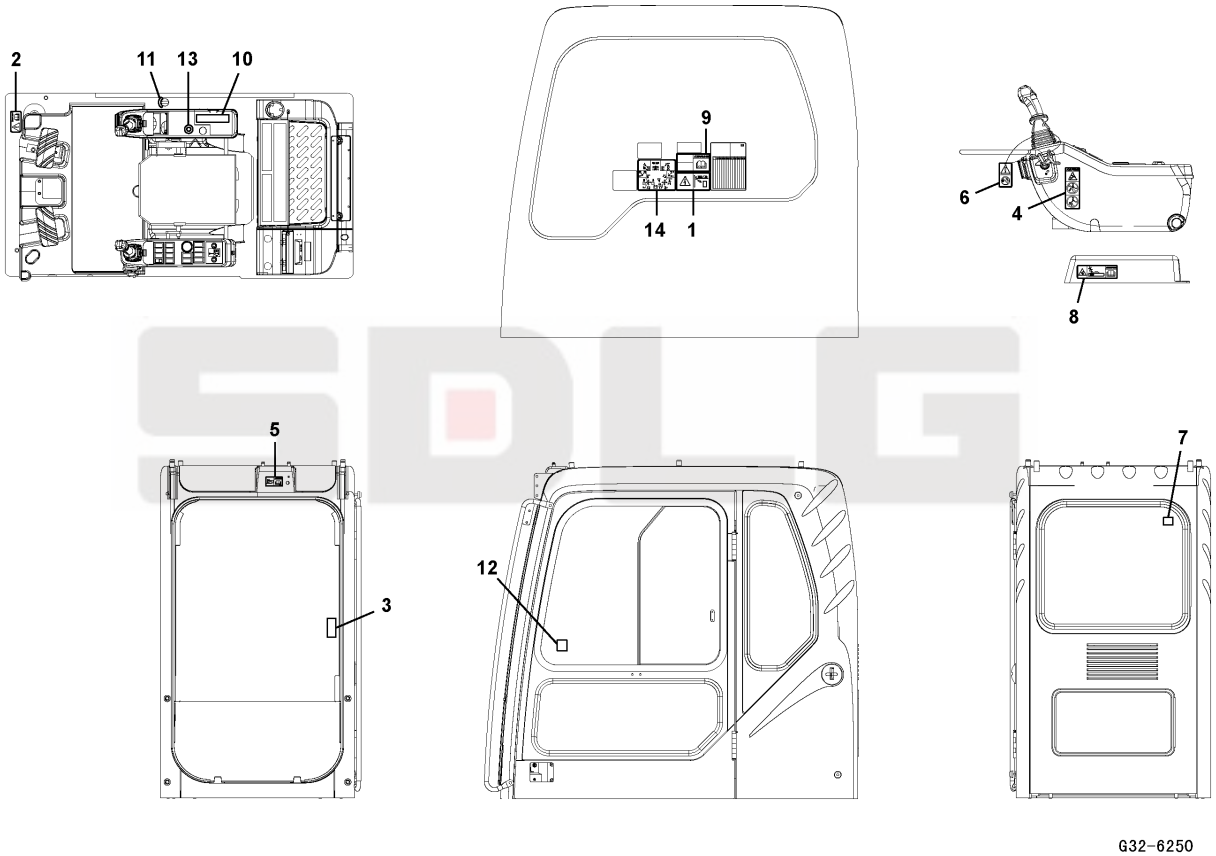

Key	Part No.	Description	Spare parts Y/N	Qty	Remarks
1	14400002	Decal	N	1	
2	14400001	Decal	Y	1	
3	14400003	Decal	Y	1	
4	11214335	Decal	N	1	
5	11214340	Decal	N	1	
6	14400004	Decal	N	1	
7	11210239	Decal	Y	1	
8	11214338	Decal	N	1	
9	11214333	Decal	N	1	
10	11210999	Decal	Y	1	
11	11210264	Decal	Y	1	
12	11210675	Decal	Y	1	
13	11210744	Decal	Y	1	
14	11210798	Decal	N	1	
15	11214345	Decal set	Y	1	

SDLG

H

WORKING EQUIPMENT

SHANDONG LINGONG CONSTRUCTION MACHINERY CO.,LTD.

Hydraulic fluid tank assembly

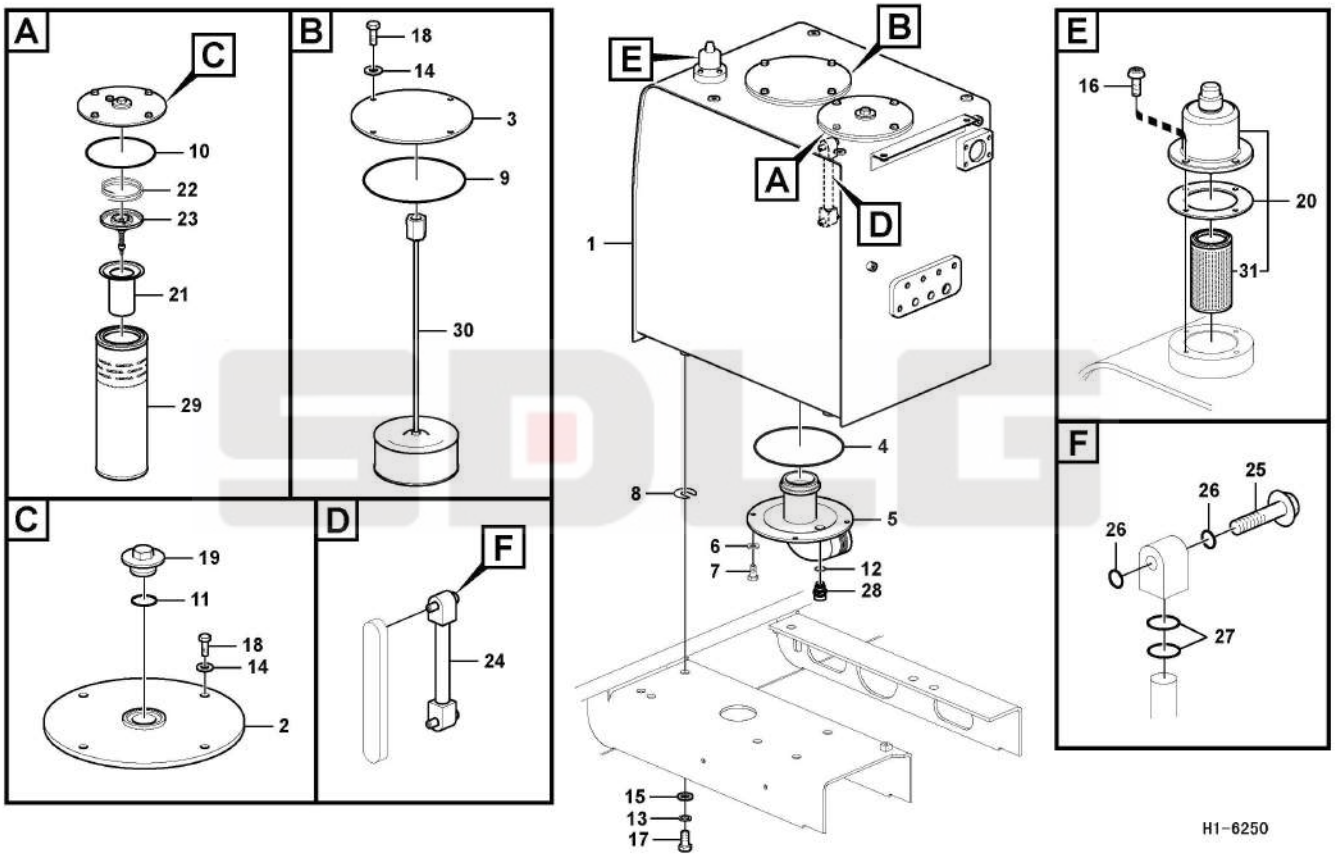

Key	Part No.	Description	Spare parts Y/N	Qty	Remarks
1	11216725	Tank	N	1	
2	11216716	Cover	Y	1	
3	11216691	Cover	Y	1	
4	11210070	O-ring	Y	1	
5	11216692	Cover	Y	1	
6	11210197	Plain washer	Y	4	
7	11210123	Hexagon screw	Y	4	
8	11211124	Shim	Y	5	
9	11210070	O-ring	Y	1	
10	11210069	O-ring	Y	1	
11	11210176	O-ring	Y	1	
12	11210052	Gasket	Y	1	
13	11211638	Spring washer	Y	4	
14	11210197	Plain washer	Y	8	
15	11210200	Plain washer	Y	4	
16	11210088	Six point socket screw	Y	4	
17	11210195	Screw	Y	4	
18	11210123	Hexagon screw	Y	8	
19	11210699	Plug	Y	1	
20	14401300	Breather cap	Y	1	
21	11211216	Strainer	N	1	
22	11210664	Spring	Y	1	
23	11210663	Valve	N	1	
24	11210686	Gauge	Y	1	
25	11210495	Bolt	Y	2	
26	11210132	O-ring	Y	4	
27	11210166	O-ring	Y	4	
28	11210523	Valve	N	1	
29	11211189	Hydraulic fluid filter	Y	1	
30	14401299	Hydraulic fluid filter	Y	1	

Hydraulic fluid tank assembly

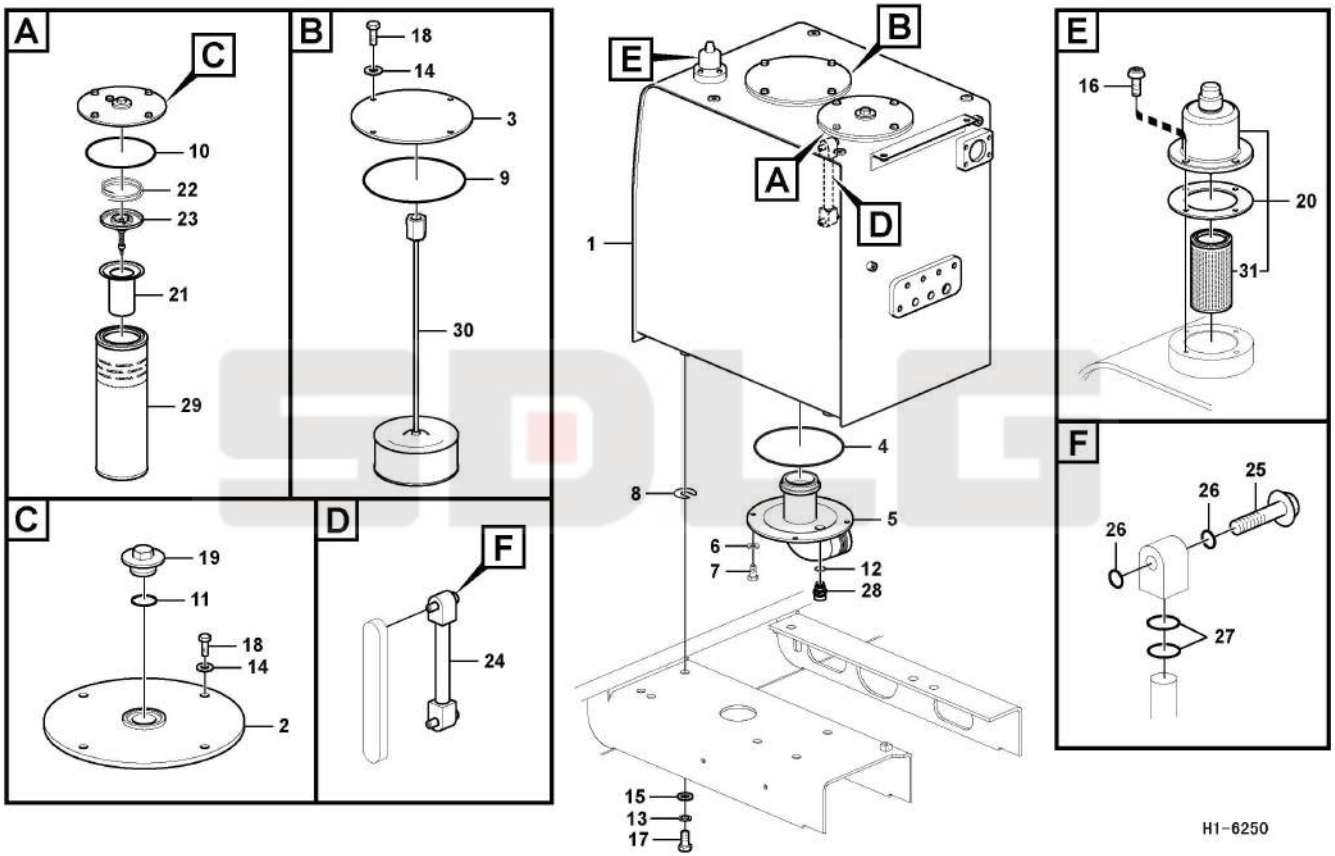

Key	Part No.	Description	Spare parts Y/N	Qty	Remarks
31	11210987	Filter	Y	1	

Swing hydraulic system

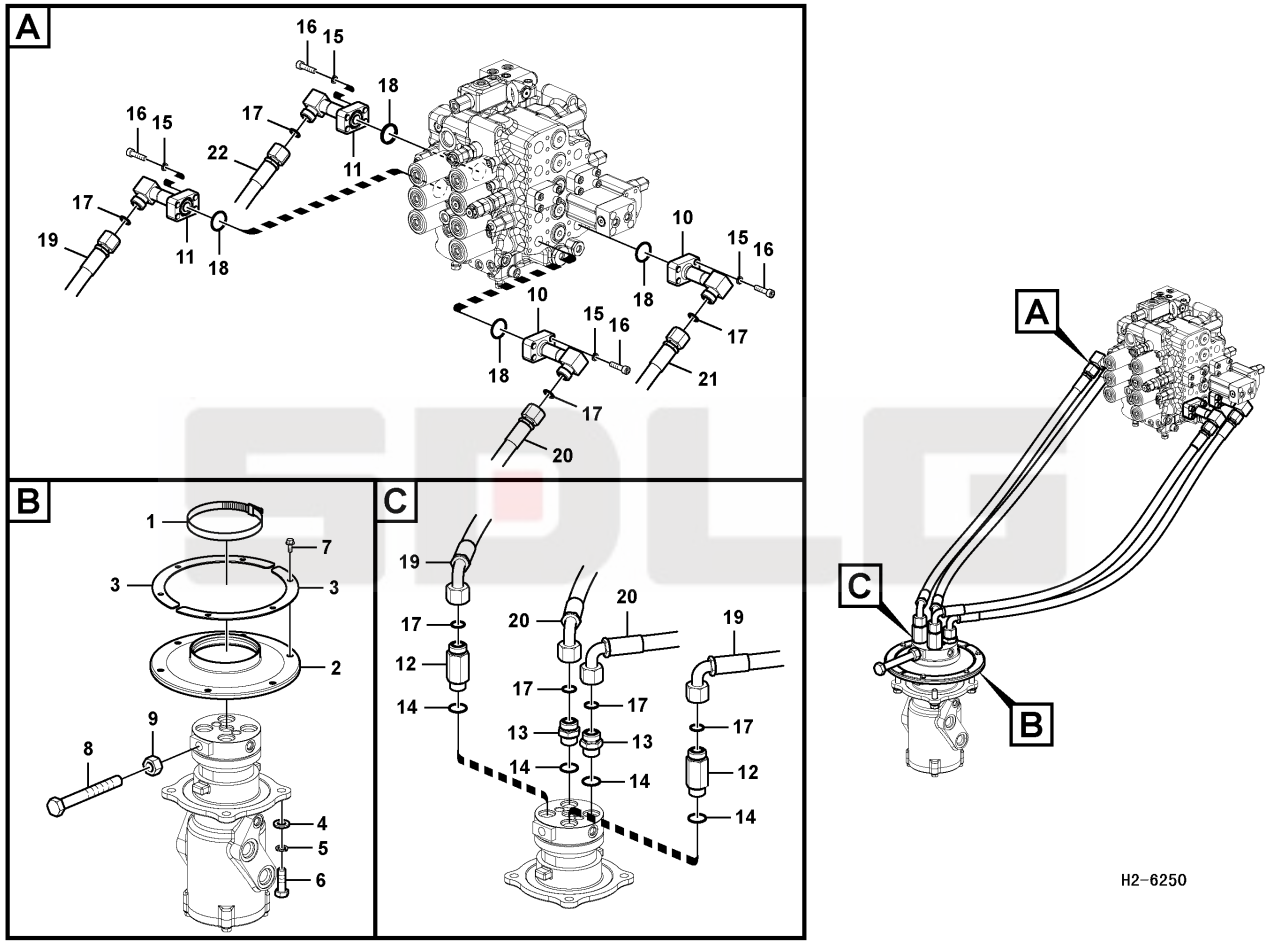

Key	Part No.	Description	Spare parts Y/N	Qty	Remarks
1	11211646	Screw clamp	Y	1	
2	11210674	Sealing ring	Y	1	
3	11210673	Plate	Y	2	
4	kongbai	Kongbai	N	4	
5	11210067	Spring washer	Y	4	
6	11210103	Hexagon screw	Y	4	
7	11210031	Flange screw	Y	6	
8	11210210	Hexagon screw	Y	1	
9	11210196	Nut	Y	1	
10	11217035	Pipe	Y	2	
11	11217036	Pipe	Y	2	
12	11211908	Nipple	Y	2	
13	11211707	Connector	Y	2	
14	11210144	O-ring	Y	4	
15	11210064	Spring washer	Y	16	
16	11210151	Hex. socket screw	Y	16	
17	11212396	O-ring	Y	8	
18	11212003	O-ring	N	4	
19	11217275	Hose	Y	2	
20	11217272	Hose	Y	2	

Travel hydraulic system

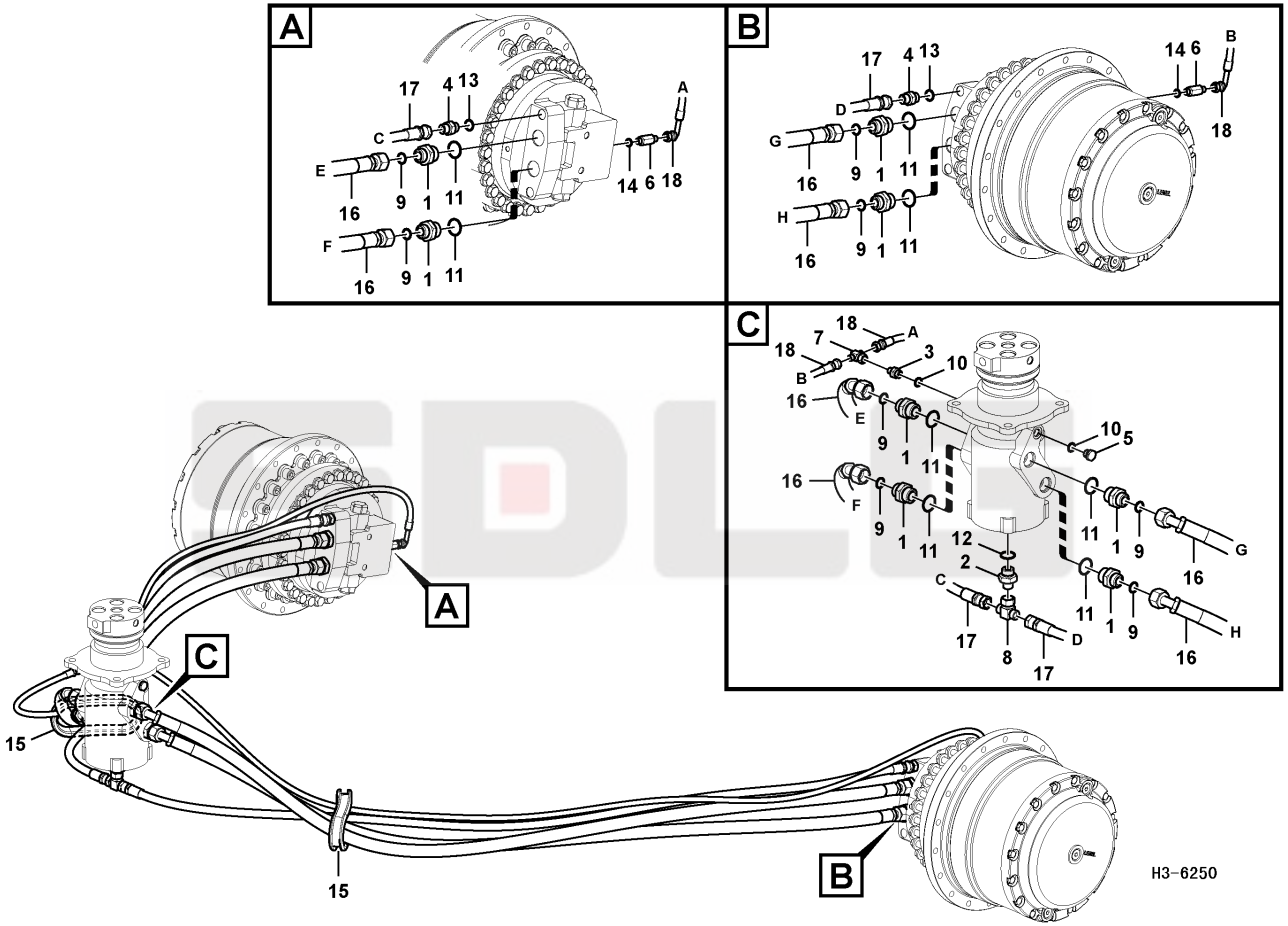

Key	Part No.	Description	Spare parts Y/N	Qty	Remarks
1	11211707	Connector	Y	8	
2	11211680	Connector	Y	1	
3	11211679	Connector	Y	1	
4	11211674	Connector	Y	2	
5	kongbai	Kongbai	N	1	
6	11211677	Connector	Y	2	
7	11211664	T-nipple	Y	1	
8	11211665	T-nipple	Y	1	
9	11212396	O-ring	Y	8	
10	11210135	O-ring	Y	2	
11	11210144	O-ring	Y	8	
12	11210141	O-ring	Y	1	
13	11210166	O-ring	Y	2	
14	11210133	O-ring	Y	2	
15	11210265	Grommet	Y	2	
16	11217287	Hose	Y	4	
17	11217309	Hose	Y	2	
18	11217343	Hose	N	2	

Control valve hose assembly

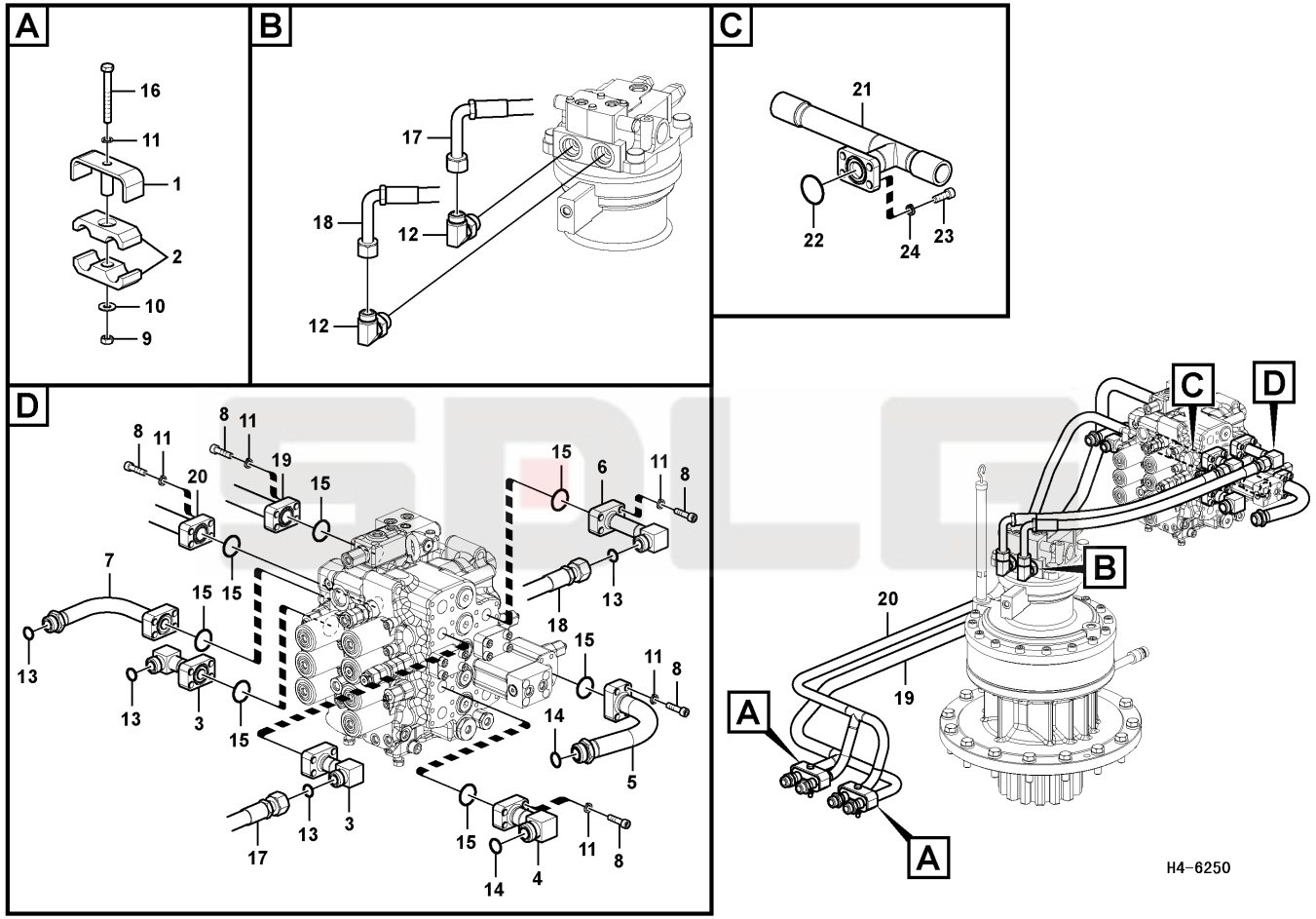

Key	Part No.	Description	Spare parts Y/N	Qty	Remarks
1	11211326	Clamp	Y	2	
2	11211327	Clamp	Y	4	
3	11217031	Pipe	Y	2	
4	11217032	Pipe	Y	1	
5	11217238	Pipe	Y	1	
6	11217028	Pipe	Y	1	
7	11217030	Pipe	Y	1	
8	11210151	Hex. socket screw	Y	32	
9	11210130	Hexagon nut	Y	2	
10	11211641	Washer	Y	2	
11	11210064	Spring washer	Y	34	
12	11210010	Nipple	Y	2	
13	11212396	O-ring	Y	8	
14	11210114	O-ring	Y	2	
15	11212003	O-ring	N	8	
16	11210128	Hexagon screw	Y	2	
17	11217262	Hose	Y	1	
18	11217263	Hose	Y	1	
19	11217236	Pipe	Y	1	
20	11217235	Pipe	Y	1	
21	11217242	Pipe	Y	1	
22	11210050	O-ring	Y	1	
23	11210154	Hex. socket screw	Y	4	
24	11210065	Spring washer	Y	4	

Hose assembly

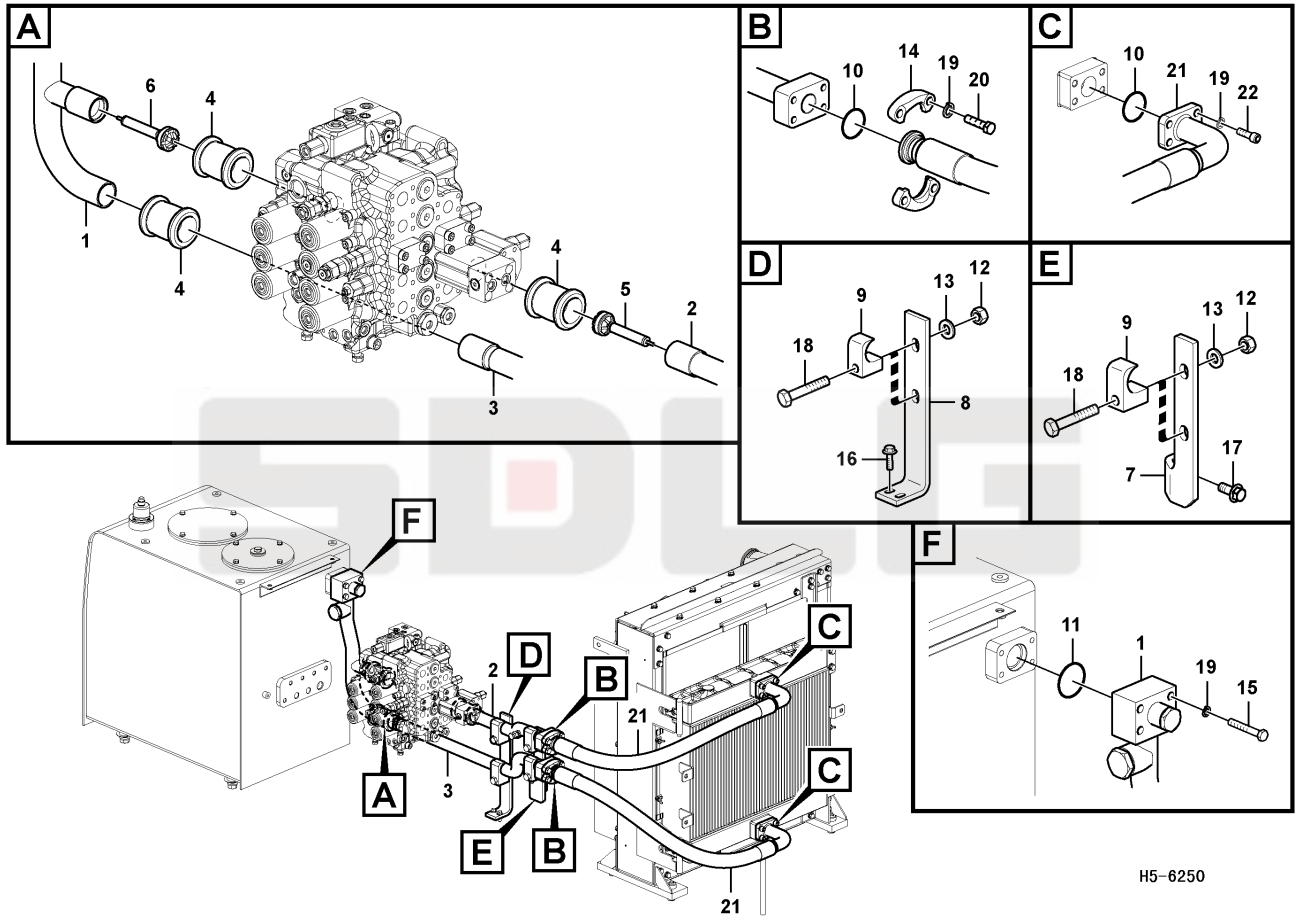

Key	Part No.	Description	Spare parts Y/N	Qty	Remarks
1	11217233	Pipe	Y	1	
2	11217252	Pipe	Y	1	
3	11217253	Pipe	Y	1	
4	11210670	Coupling piece	Y	3	
5	11211922	Valve	N	1	
6	11210671	Valve	N	1	
7	kongbai	Kongbai	N	1	
8	11211921	Bracket	Y	1	
9	11211926	Clamp	Y	4	
10	11210050	O-ring	Y	4	
11	11210051	O-ring	N	1	
12	11210109	Hexagon nut	Y	4	
13	kongbai	Kongbai	N	4	
14	11210019	Flange half	Y	4	
15	11211931	Hexagon screw	Y	4	
16	11210034	Flange screw	Y	2	
17	11214777	Screw	N	2	
18	11211930	Hexagon screw	Y	4	
19	11210065	Spring washer	Y	20	
20	11211929	Hexagon screw	Y	8	
21	11217268	Hose	Y	2	
22	11210155	Hex. socket screw	Y	8	

Hydraulic system

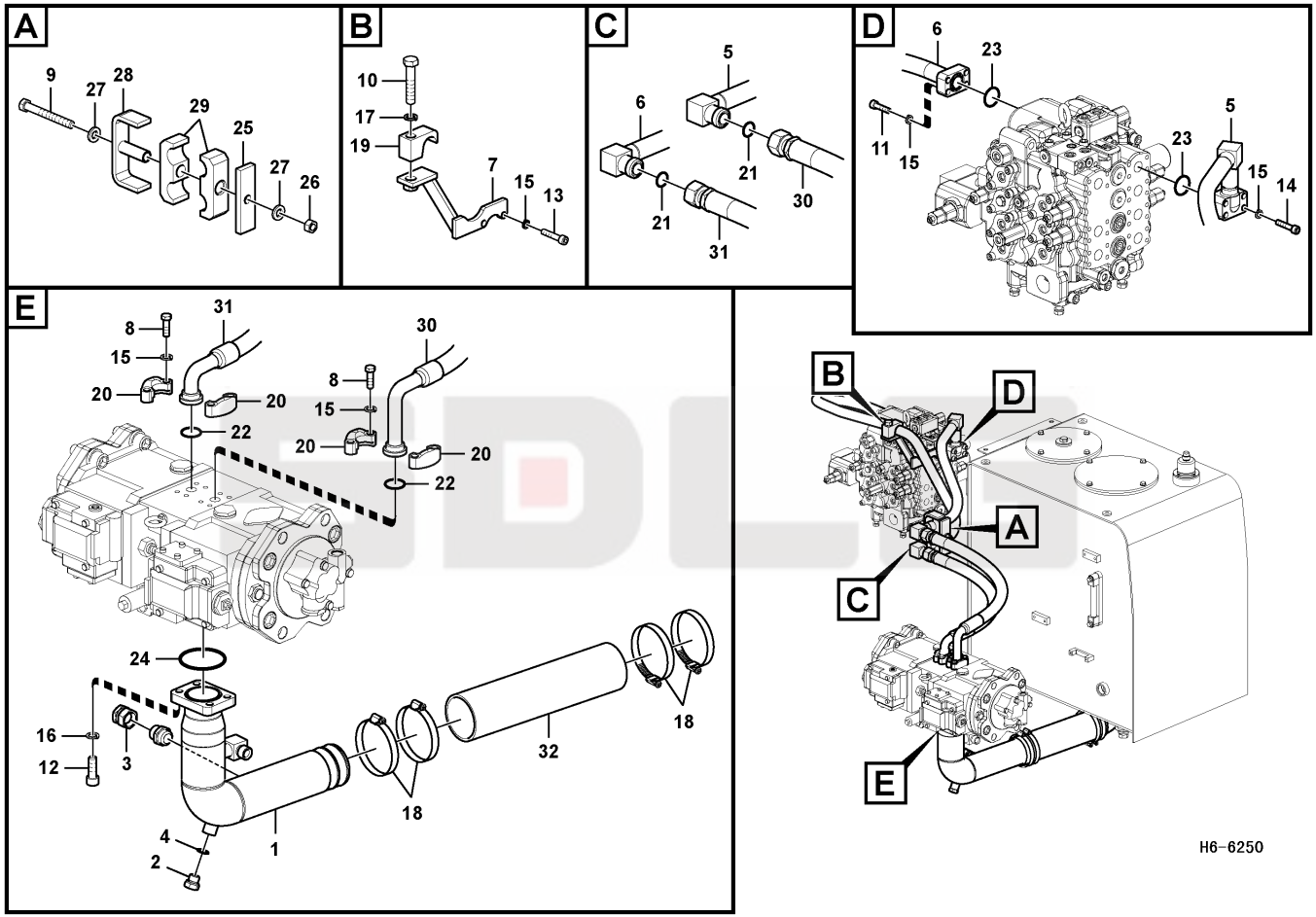

Key	Part No.	Description	Spare parts Y/N	Qty	Remarks
1	11217250	Pipe	Y	1	
2	11211700	Plug	Y	1	
3	11211934	Plug	Y	1	
4	11210166	O-ring	Y	1	
5	11217244	Pipe	Y	1	
6	11217241	Pipe	Y	1	
7	11219616	Bracket	N	1	
8	11210214	Hexagon screw	Y	8	
9	11211937	Hexagon screw	Y	1	
10	11210105	Hexagon screw	Y	1	
11	11210151	Hex. socket screw	Y	4	
12	11210154	Hex. socket screw	Y	4	
13	11210152	Hex. socket screw	Y	2	
14	11210159	Hex. socket screw	Y	4	
15	11210064	Spring washer	Y	18	
16	11210065	Spring washer	Y	4	
17	11210067	Spring washer	Y	1	
18	11211645	Clamp	N	4	
19	11211938	Clamp	Y	1	
20	11210020	Flange	Y	4	
21	11210114	O-ring	Y	2	
22	11210047	O-ring	Y	2	
23	11212003	O-ring	N	2	
24	11210111	O-ring	Y	1	
25	11219617	Plate	Y	1	
26	11211940	Hexagon nut	Y	1	
27	11210201	Plain washer	Y	2	
28	11211941	Clamp	Y	1	
29	11211942	Rubber clamp	Y	2	
30	11217255	Hose	Y	1	

Hydraulic system

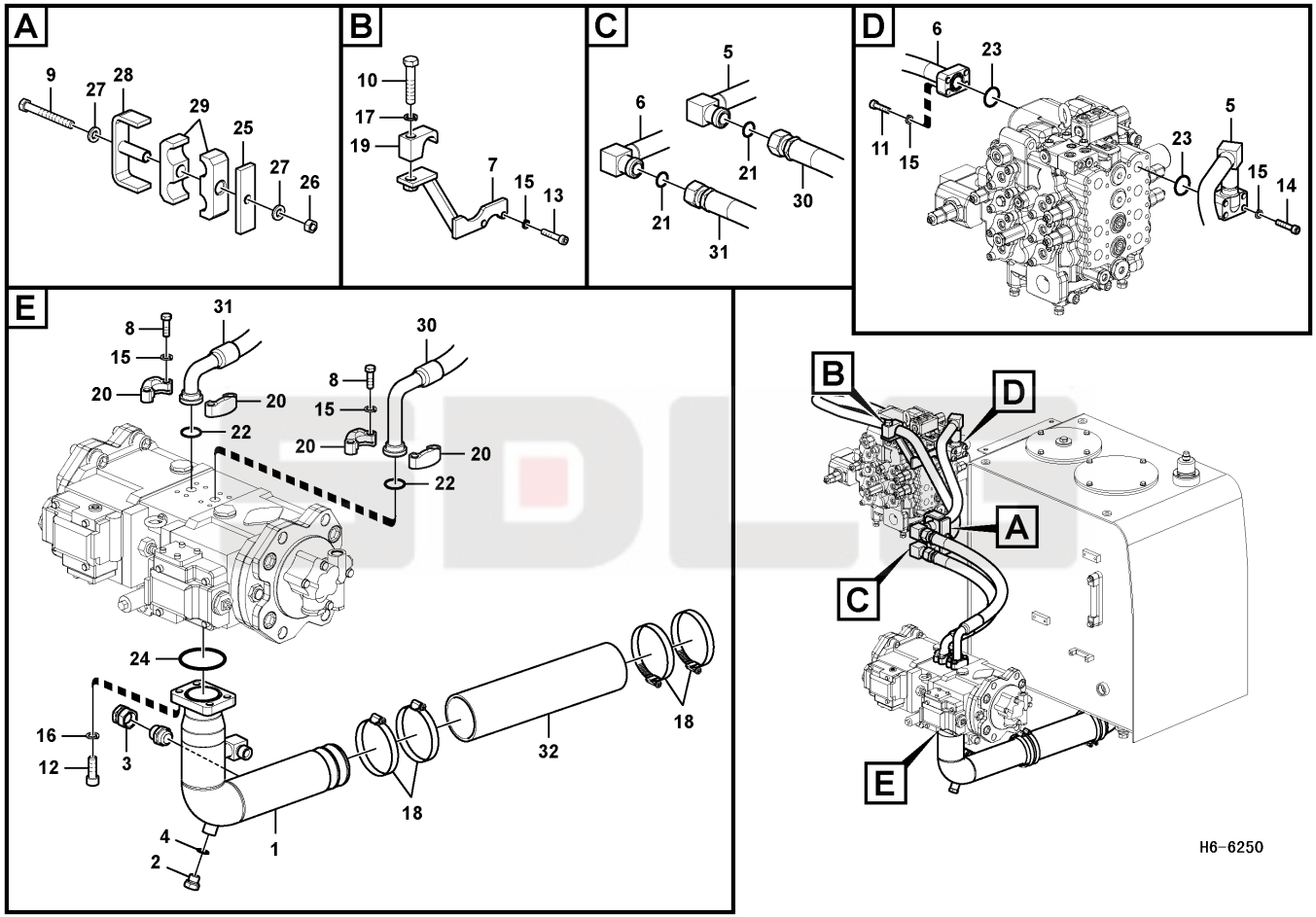

Key	Part No.	Description	Spare parts Y/N	Qty	Remarks
31	11217259	Hose	Y	1	
32	11211945	Rubber hose	Y	1	

Control valve assembly

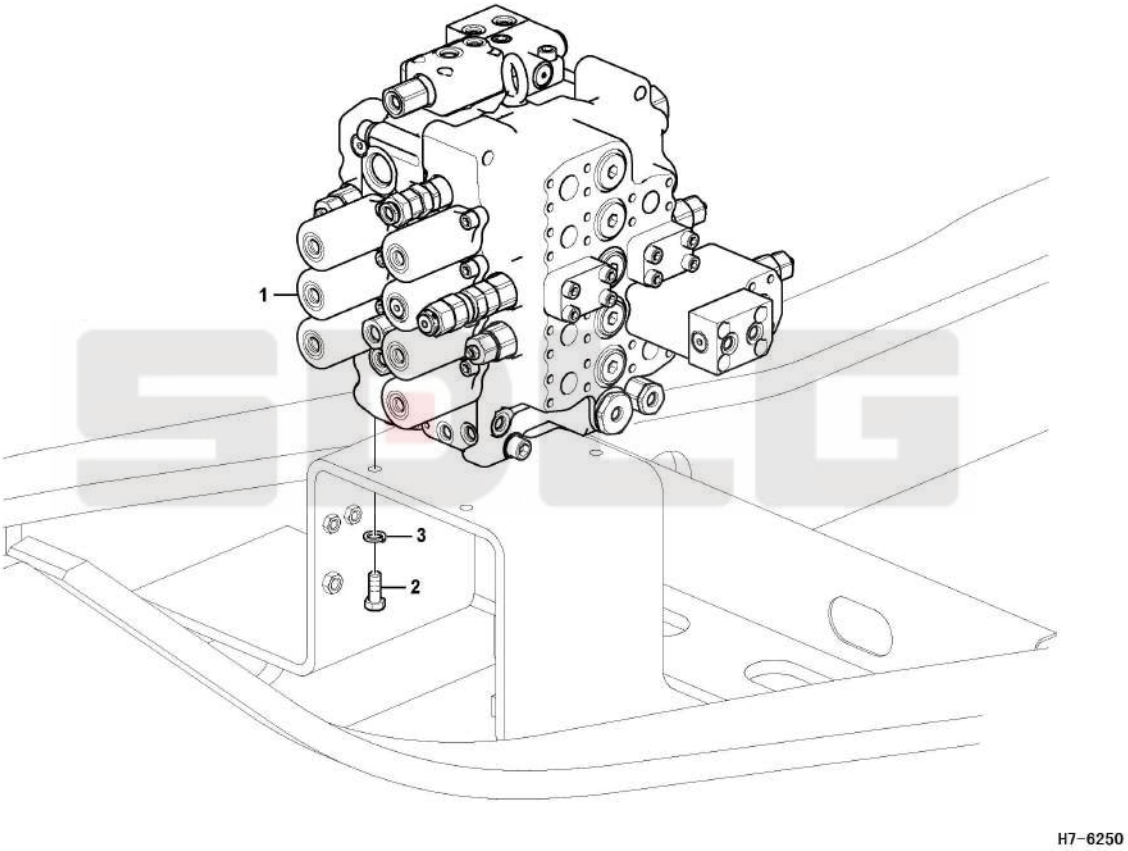

Key	Part No.	Description	Spare parts Y/N	Qty	Remarks
1	11222943	Control valve	Y	1	
2	11210098	Hexagon screw	Y	4	
3	11210065	Spring washer	Y	4	

Control valve

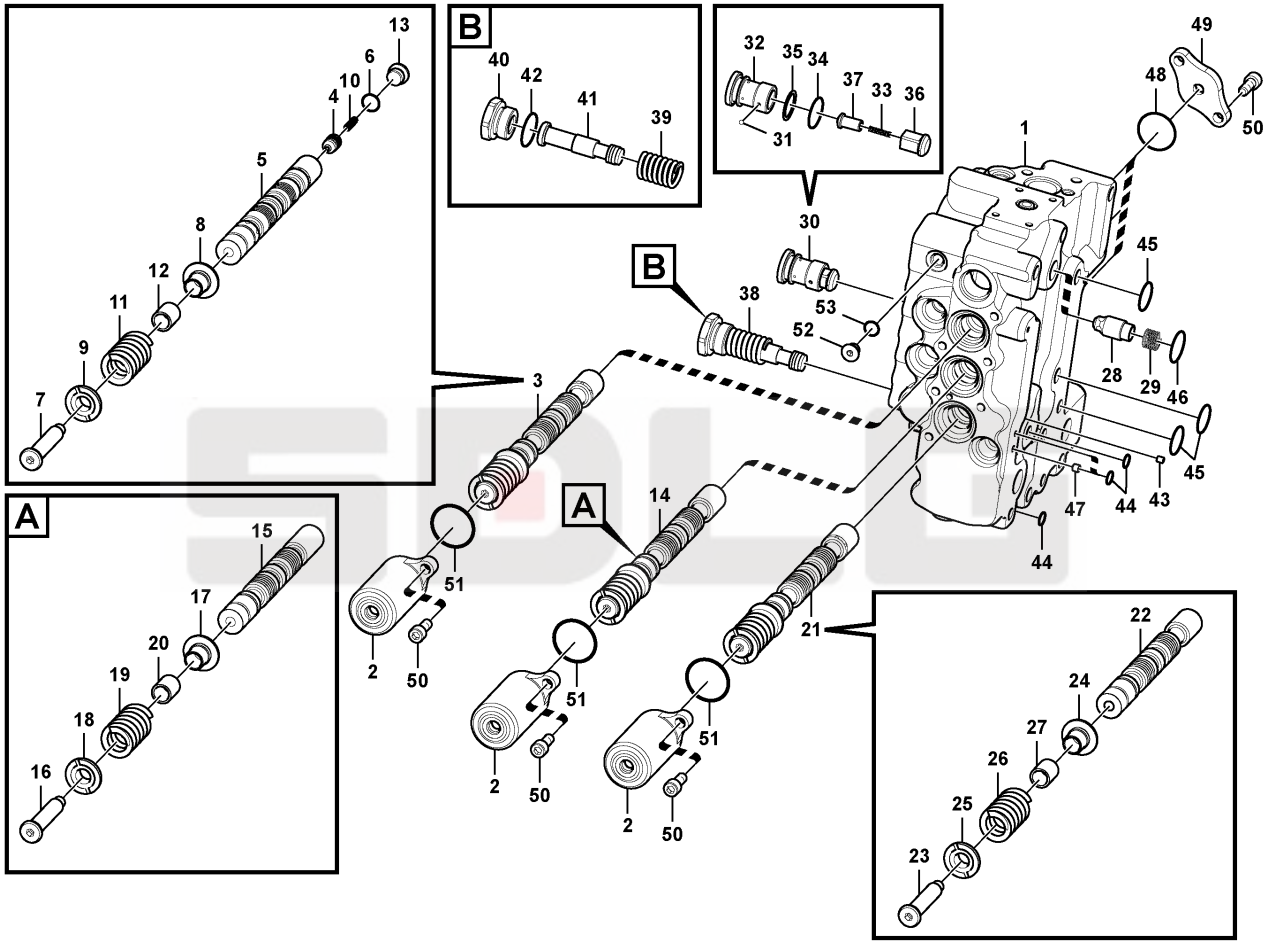

Key	Part No.	Description	Spare parts Y/N	Qty	Remarks
1	kongbai	Kongbai	N	1	
2	11211429	Cap	Y	3	
3	11214440	Slide	N	1	
4	11211436	Valve	Y	1	
5	kongbai	Kongbai	N	1	
6	11211446	Cap	Y	1	
7	11211448	Retainer	Y	1	
8	11211452	Spring guide	Y	1	
9	11211453	Spring guide	Y	1	
10	11211459	Spring	Y	1	
11	11211461	Spring	Y	1	
12	11211466	Spacer	Y	1	
13	11210135	O-ring	Y	1	
14	11211947	Slide	N	1	
15	kongbai	Kongbai	N	1	
16	11211448	Retainer	Y	1	
17	11211452	Spring guide	Y	1	
18	11211453	Spring guide	Y	1	
19	11211461	Spring	Y	1	
20	11211466	Spacer	Y	1	
21	11211423	Slide	N	1	
22	kongbai	Kongbai	N	1	
23	11211448	Retainer	Y	1	
24	11211452	Spring guide	Y	1	
25	11211453	Spring guide	Y	1	
26	11211461	Spring	Y	1	
27	11211466	Spacer	Y	1	
28	11211434	Valve	Y	1	
29	11211457	Spring	Y	1	
30	11211948	Valve	N	1	

Control valve

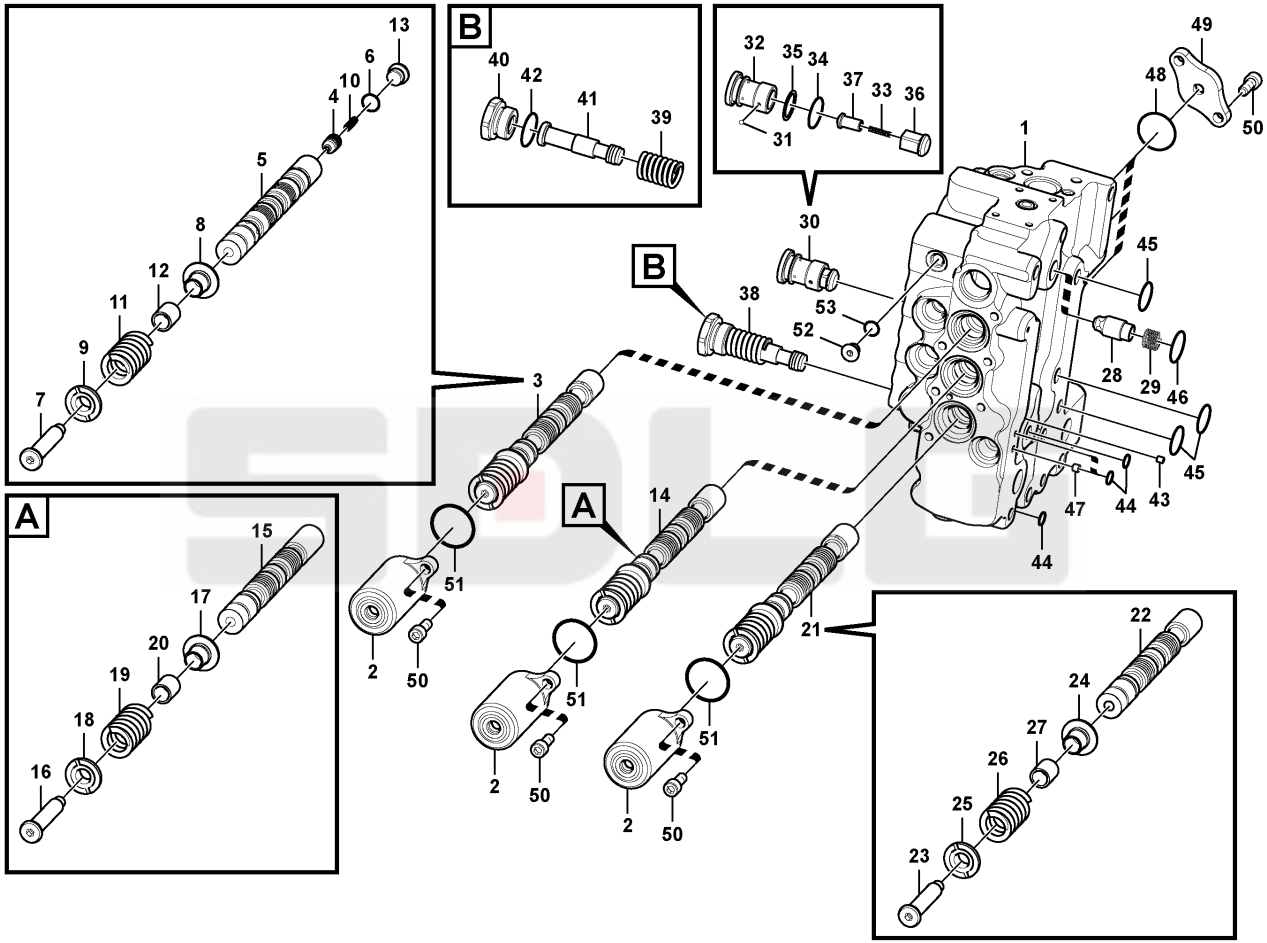

Key	Part No.	Description	Spare parts Y/N	Qty	Remarks
31	11211468	Ball	Y	1	
32	11211451	Plug	Y	1	
33	11211454	Spring	Y	1	
34	11210142	O-ring	Y	1	
35	11211070	Ring	Y	1	
36	kongbai	Kongbai	N	1	
37	kongbai	Kongbai	N	1	
38	11211949	Valve	Y	1	
39	11211460	Spring	Y	1	
40	11211439	Cap	Y	1	
41	11211950	Slide	Y	1	
42	11210144	O-ring	Y	1	
43	kongbai	Kongbai	N	1	
44	11210132	O-ring	Y	4	
45	11210139	O-ring	Y	4	
46	11210228	O-ring	Y	1	
47	11211469	Screw	Y	1	
48	11210167	O-ring	Y	3	
49	11211430	Plate	Y	3	
50	11211951	Hex. socket screw	N	11	
51	11210168	O-ring	Y	3	
52	11211467	Cap	Y	1	
53	11210133	O-ring	Y	1	
54	11210322	Sealing kit	Y	1	
55	11214528	Control valve	N	1	

Control valve

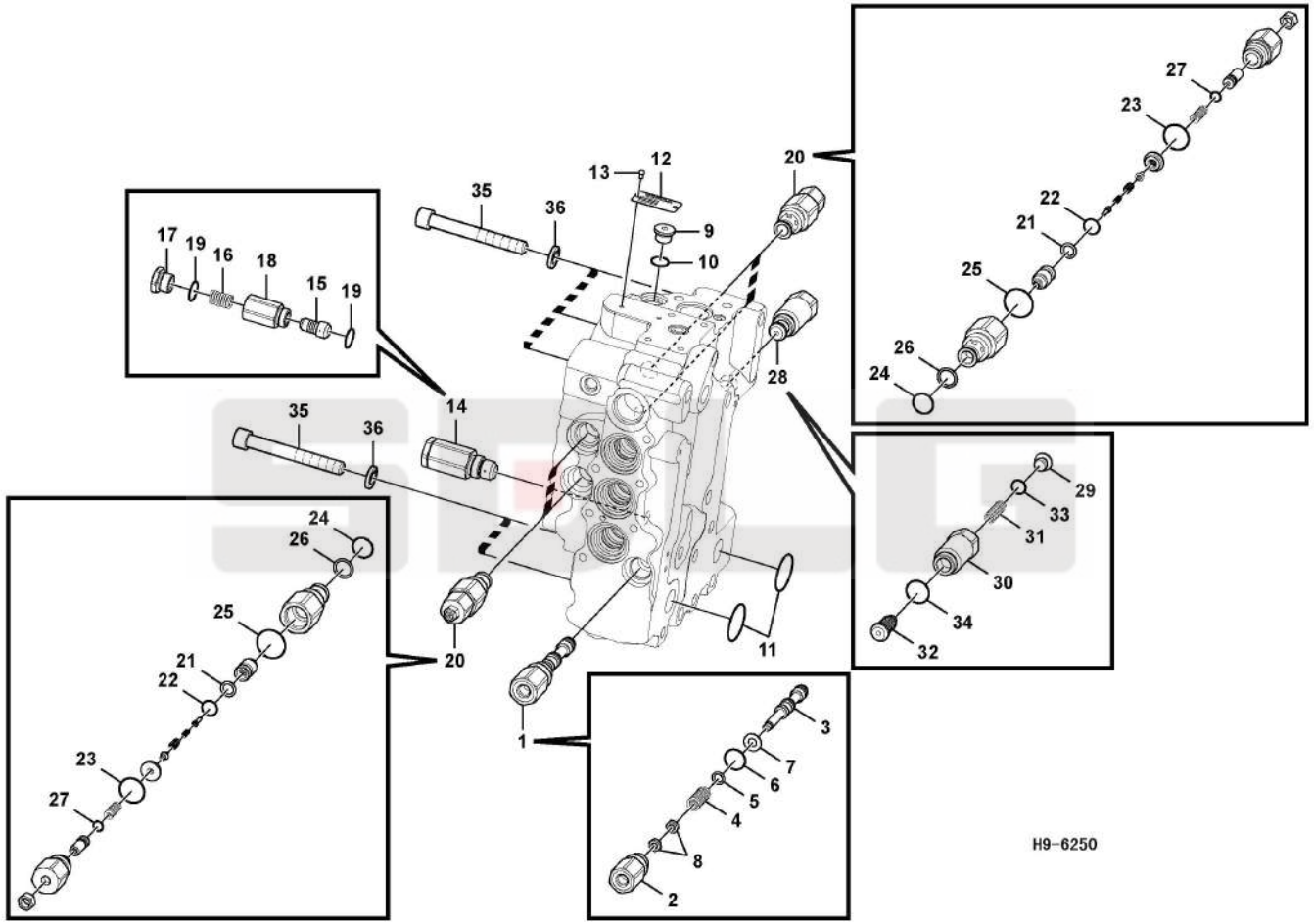

Key	Part No.	Description	Spare parts Y/N	Qty	Remarks
1	kongbai	Kongbai	N	1	
2	11211440	Cover	Y	1	
3	11221157	Slide	Y	1	
4	11211456	Spring	Y	1	
5	11211464	Shim	Y	1	
6	11210138	O-ring	Y	1	
7	11210197	Plain washer	Y	1	
8	11210129	Hexagon nut	Y	2	
9	11223103	Plug	Y	1	
10	11210135	O-ring	Y	1	
11	11210145	O-ring	Y	2	
12	11211952	Name plate	N	1	
13	11211953	Screw	Y	2	
14	11211954	Valve	Y	1	
15	kongbai	Kongbai	N	1	
16	kongbai	Kongbai	N	1	
17	11211955	Cap	Y	1	
18	11211956	Spring	Y	1	
19	11210138	O-ring	Y	2	
20	11210555	Valve	Y	4	
21	11211957	Ring	Y	1	
22	11211958	O-ring	Y	1	
23	11210146	O-ring	Y	1	
24	11210136	O-ring	Y	1	
25	11210008	O-ring	Y	1	
26	11211068	Ring	Y	1	
27	11210131	O-ring	Y	1	
28	11211959	Valve	Y	1	
29	11211467	Cap	Y	1	
30	11211441	Connection sleeve	Y	1	

Control valve

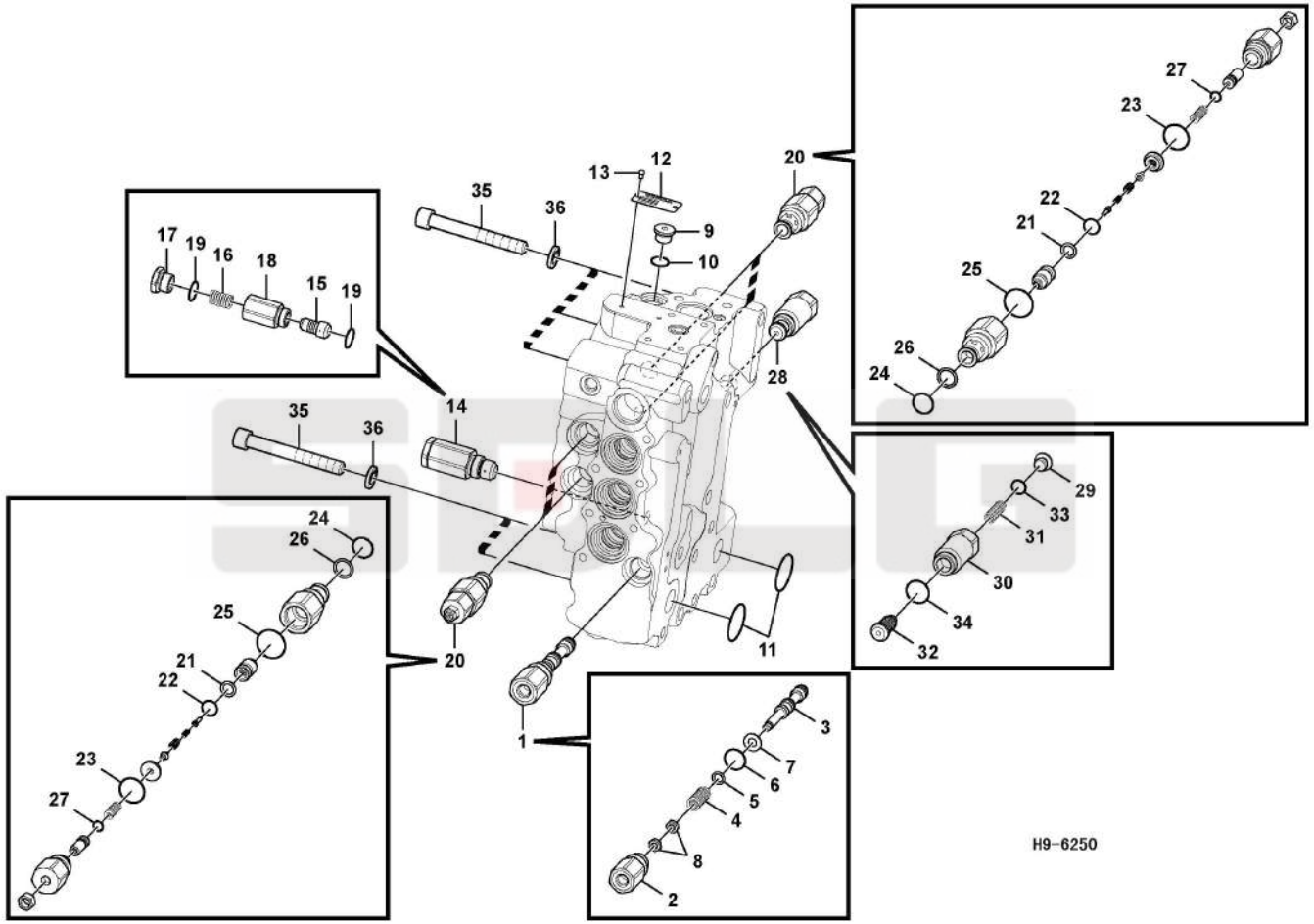

Key	Part No.	Description	Spare parts Y/N	Qty	Remarks
31	11211960	Spring	N	1	
32	11211437	Control plunger	Y	1	
33	11210133	O-ring	Y	1	
34	11210138	O-ring	Y	1	
35	11210246	Hex. socket screw	Y	5	
36	11223109	Spring washer	Y	5	
37	11210322	Sealing kit	Y	1	
38	11214528	Control valve	N	1	

Control valve

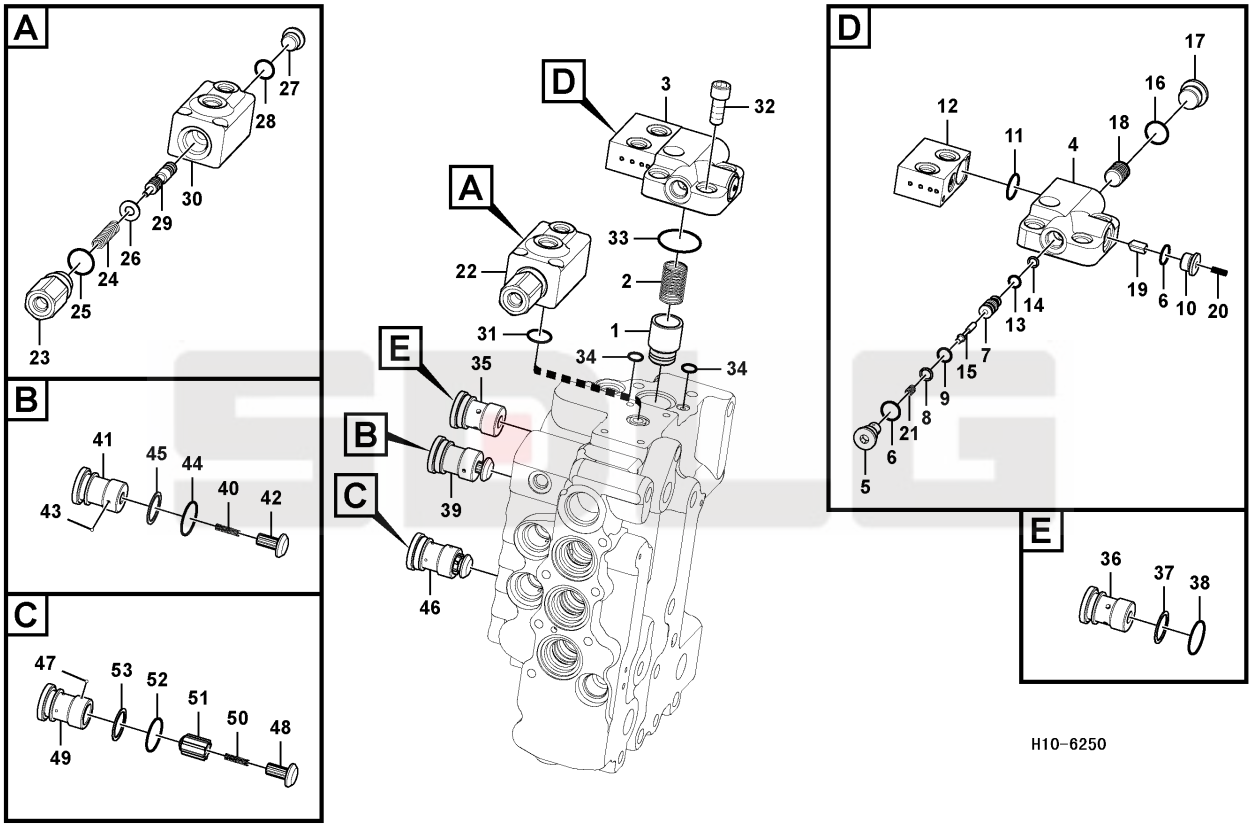

Key	Part No.	Description	Spare parts Y/N	Qty	Remarks
1	11211438	Spring seat	Y	1	
2	11211455	Spring	Y	1	
3	11210676	Valve	Y	1	
4	kongbai	Kongbai	N	1	
5	kongbai	Kongbai	N	1	
6	11210135	O-ring	Y	2	
7	11211970	Sleeve	Y	1	
8	11211964	Ring	Y	1	
9	11210132	O-ring	Y	1	
10	11211699	Plug	Y	1	
11	11210137	O-ring	Y	1	
12	kongbai	Kongbai	N	1	
13	11210131	O-ring	Y	1	
14	11211963	Ring	Y	1	
15	11211968	Control plunger	Y	1	
16	11210166	O-ring	Y	1	
17	11211973	Cap	Y	1	
18	kongbai	Kongbai	N	1	
19	11211969	Control plunger	Y	1	
20	11211971	Spring	Y	1	
21	11211972	Spring	Y	1	
22	11210570	Valve	Y	1	
23	11211440	Cover	Y	1	
24	11211463	Spring	Y	1	
25	11210138	O-ring	Y	1	
26	11211465	Shim	Y	1	
27	11211699	Plug	Y	1	
28	11210135	O-ring	Y	1	
29	11211962	Slide	N	1	
30	11211425	Block	N	1	

Control valve

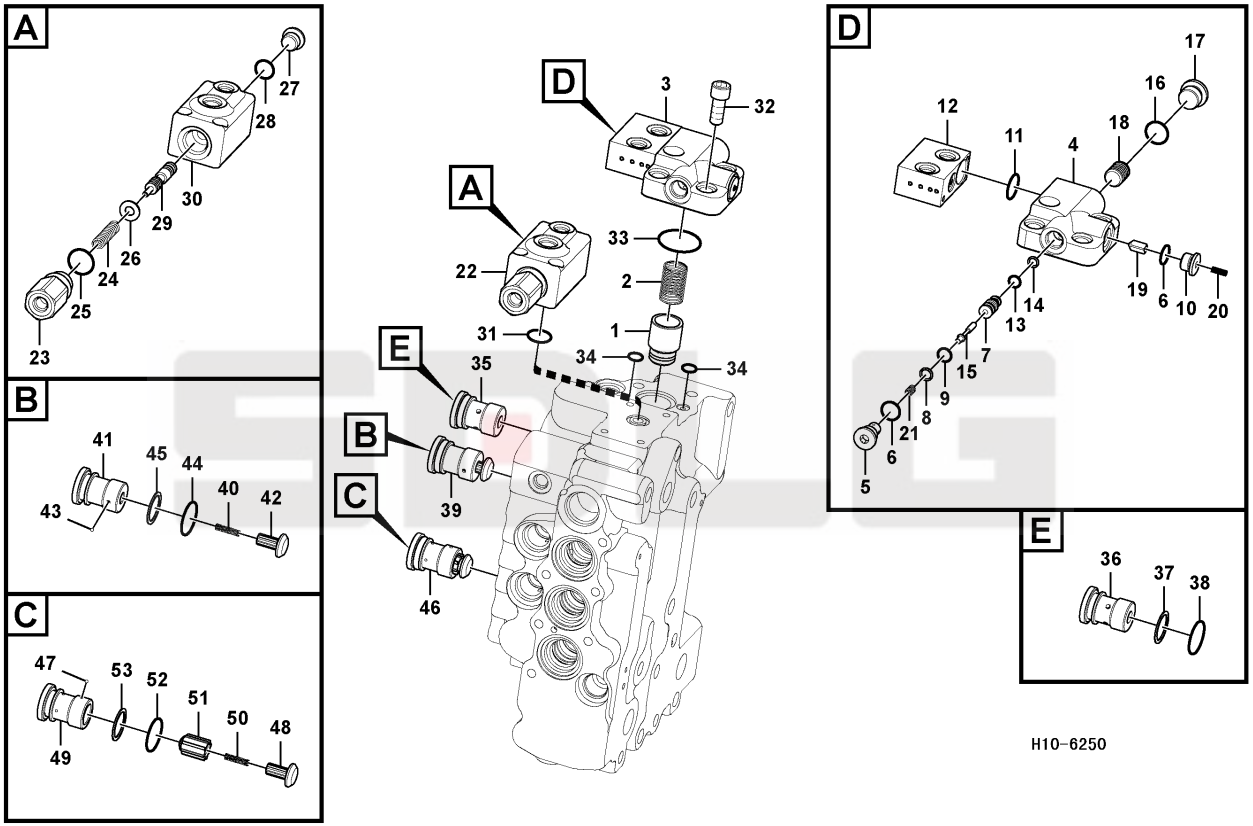

Key	Part No.	Description	Spare parts Y/N	Qty	Remarks
31	11210166	O-ring	Y	1	
32	11211610	Screw	Y	3	
33	11210145	O-ring	Y	1	
34	11210132	O-ring	Y	2	
35	11211965	Valve	N	1	
36	11211442	Cap	Y	1	
37	11211070	Ring	Y	1	
38	11210142	O-ring	Y	1	
39	11211419	Valve	Y	1	
40	11211454	Spring	Y	1	
41	11211445	Plug	Y	1	
42	11211433	Valve	Y	1	
43	11211468	Ball	Y	1	
44	11210142	O-ring	Y	1	
45	11211070	Ring	Y	1	
46	11211948	Valve	N	1	
47	11211468	Ball	Y	1	
48	11211433	Valve	Y	1	
49	11211451	Plug	Y	1	
50	11211454	Spring	Y	1	
51	11211432	Valve	Y	1	
52	11210142	O-ring	Y	1	
53	11211070	Ring	Y	1	
54	11210322	Sealing kit	Y	1	
55	11214528	Control valve	N	1	

Control valve

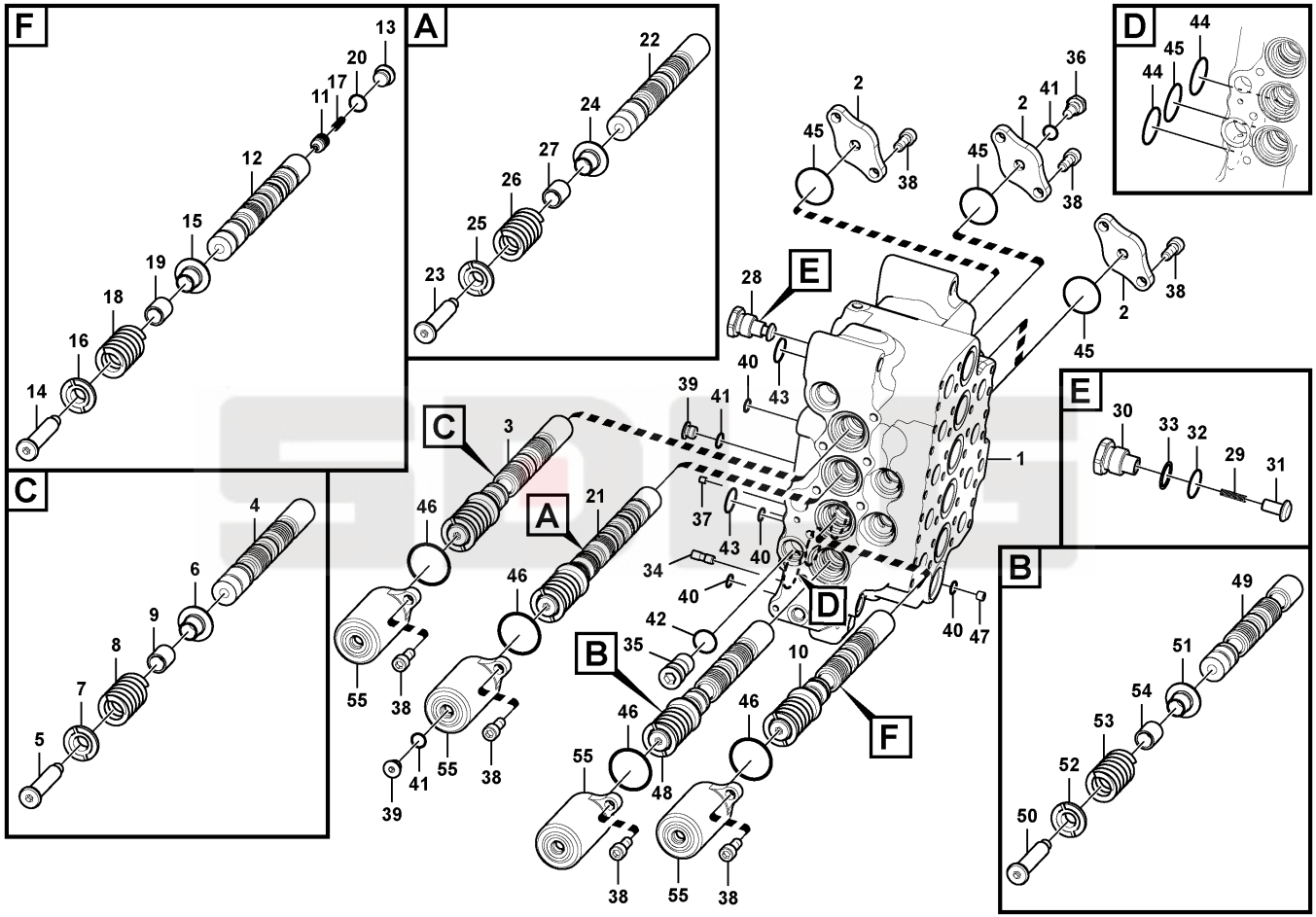

Key	Part No.	Description	Spare parts Y/N	Qty	Remarks
1	kongbai	Kongbai	N	1	
2	11211430	Plate	Y	4	
3	11211967	Slide	N	1	
4	kongbai	Kongbai	N	1	
5	11211448	Retainer	Y	1	
6	11211452	Spring guide	Y	1	
7	11211453	Spring guide	Y	1	
8	11211461	Spring	Y	1	
9	11211466	Spacer	Y	1	
10	kongbai	Kongbai	N	1	
11	11211436	Valve	Y	1	
12	kongbai	Kongbai	N	1	
13	11211446	Cap	Y	1	
14	11211448	Retainer	Y	1	
15	11211452	Spring guide	Y	1	
16	11211453	Spring guide	Y	1	
17	11211459	Spring	Y	1	
18	11211461	Spring	Y	1	
19	11211466	Spacer	Y	1	
20	11210135	O-ring	Y	1	
21	11211424	Slide	N	1	
22	kongbai	Kongbai	N	1	
23	11211448	Retainer	Y	1	
24	11211452	Spring guide	Y	1	
25	11211453	Spring guide	Y	1	
26	11211461	Spring	Y	1	
27	11211466	Spacer	Y	1	
28	kongbai	Kongbai	N	1	
29	11211454	Spring	Y	1	
30	11211443	Valve cap	Y	1	

Control valve

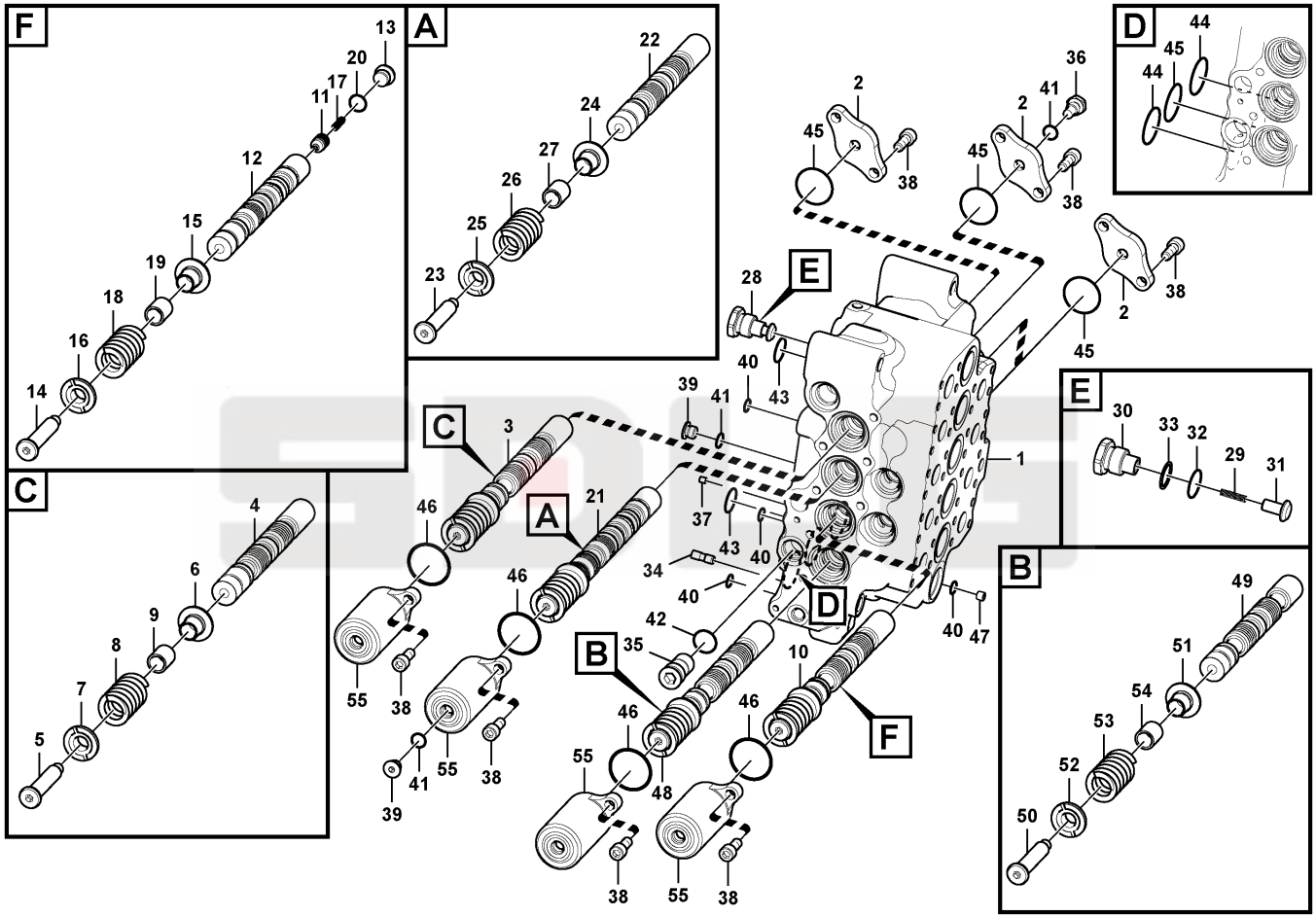

Key	Part No.	Description	Spare parts Y/N	Qty	Remarks
31	11211431	Valve	Y	1	
32	11210138	O-ring	Y	1	
33	11211069	Ring	Y	1	
34	11210409	Tube fitting	Y	1	
35	11211444	Cap	Y	1	
36	11211449	Guard	Y	1	
37	kongbai	Kongbai	N	1	
38	11211951	Hex. socket screw	N	16	
39	11211467	Cap	Y	2	
40	11210132	O-ring	Y	4	
41	11210133	O-ring	Y	3	
42	11210138	O-ring	Y	1	
43	11210139	O-ring	Y	4	
44	11210145	O-ring	Y	2	
45	11210167	O-ring	Y	5	
46	11210168	O-ring	Y	4	
47	11211469	Screw	Y	1	
48	11211423	Slide	N	1	
49	kongbai	Kongbai	N	1	
50	11211448	Retainer	Y	1	
51	11211452	Spring guide	Y	1	
52	11211453	Spring guide	Y	1	
53	11211461	Spring	Y	1	
54	11211466	Spacer	Y	1	
55	11211429	Cap	Y	4	
56	11210322	Sealing kit	Y	1	
57	11214528	Control valve	N	1	

Control valve

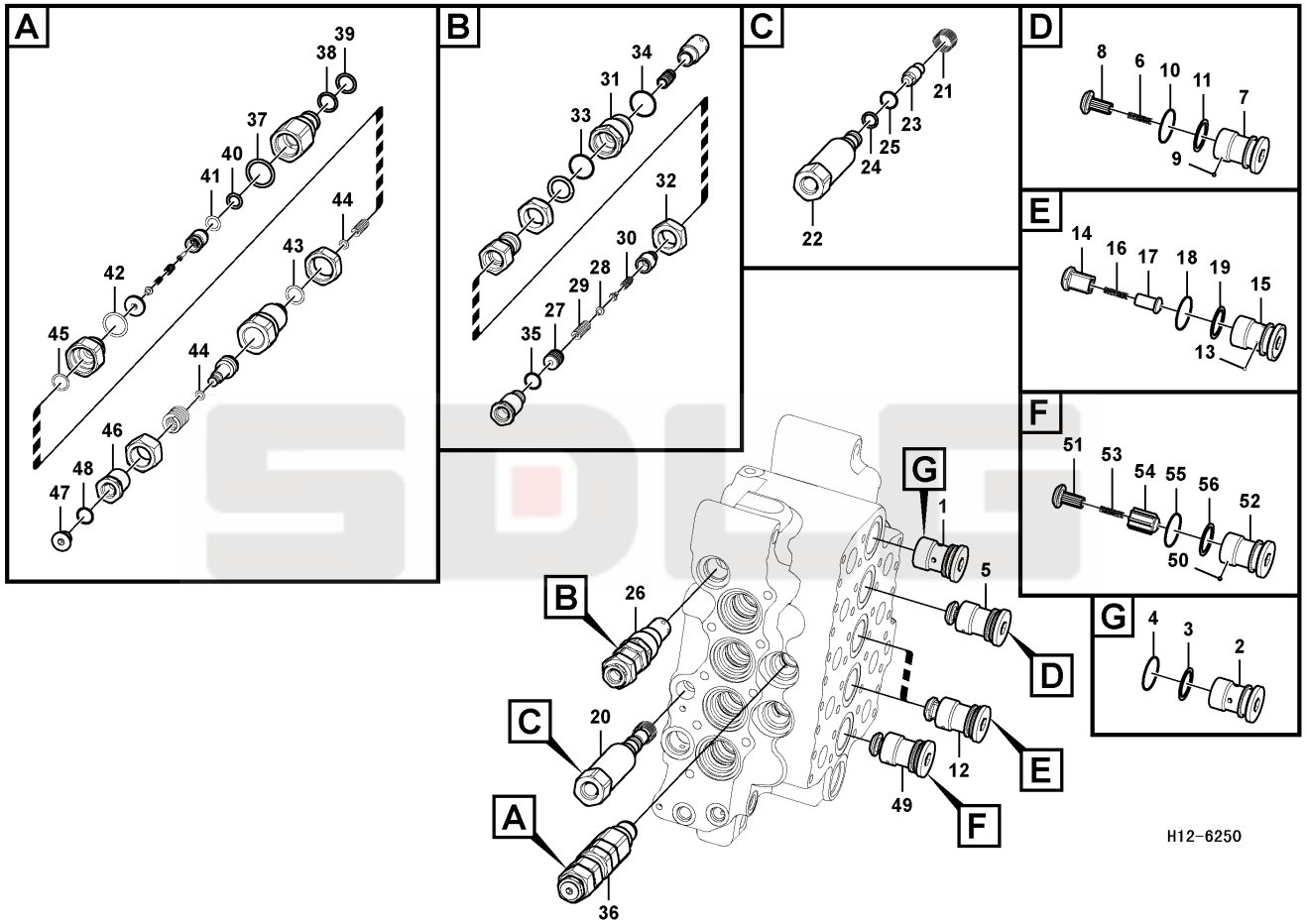

Key	Part No.	Description	Spare parts Y/N	Qty	Remarks
1	11211965	Valve	N	1	
2	11211442	Cap	Y	1	
3	11211070	Ring	Y	1	
4	11211419	Valve	Y	1	
5	11211419	Valve	Y	1	
6	11211454	Spring	Y	1	
7	11211445	Plug	Y	1	
8	11211433	Valve	Y	1	
9	11211468	Ball	Y	1	
10	11210142	O-ring	Y	1	
11	11211070	Ring	Y	1	
12	11211974	Valve	N	2	
13	11211468	Ball	Y	1	
14	kongbai	Kongbai	N	1	
15	11211450	Plug	Y	1	
16	11211454	Spring	Y	1	
17	kongbai	Kongbai	N	1	
18	11210142	O-ring	Y	1	
19	11211070	Ring	Y	1	
20	11211976	Valve	Y	1	
21	11211457	Spring	Y	1	
22	11211447	Cap	Y	1	
23	11211435	Check valve	Y	1	
24	11211975	Ring	Y	1	
25	11210134	O-ring	Y	1	
26	11210439	Relief valve	Y	1	
27	kongbai	Kongbai	N	1	
28	11211977	Valve needle	N	1	
29	11211978	Spring	Y	1	
30	11211980	Spring	N	1	

Control valve

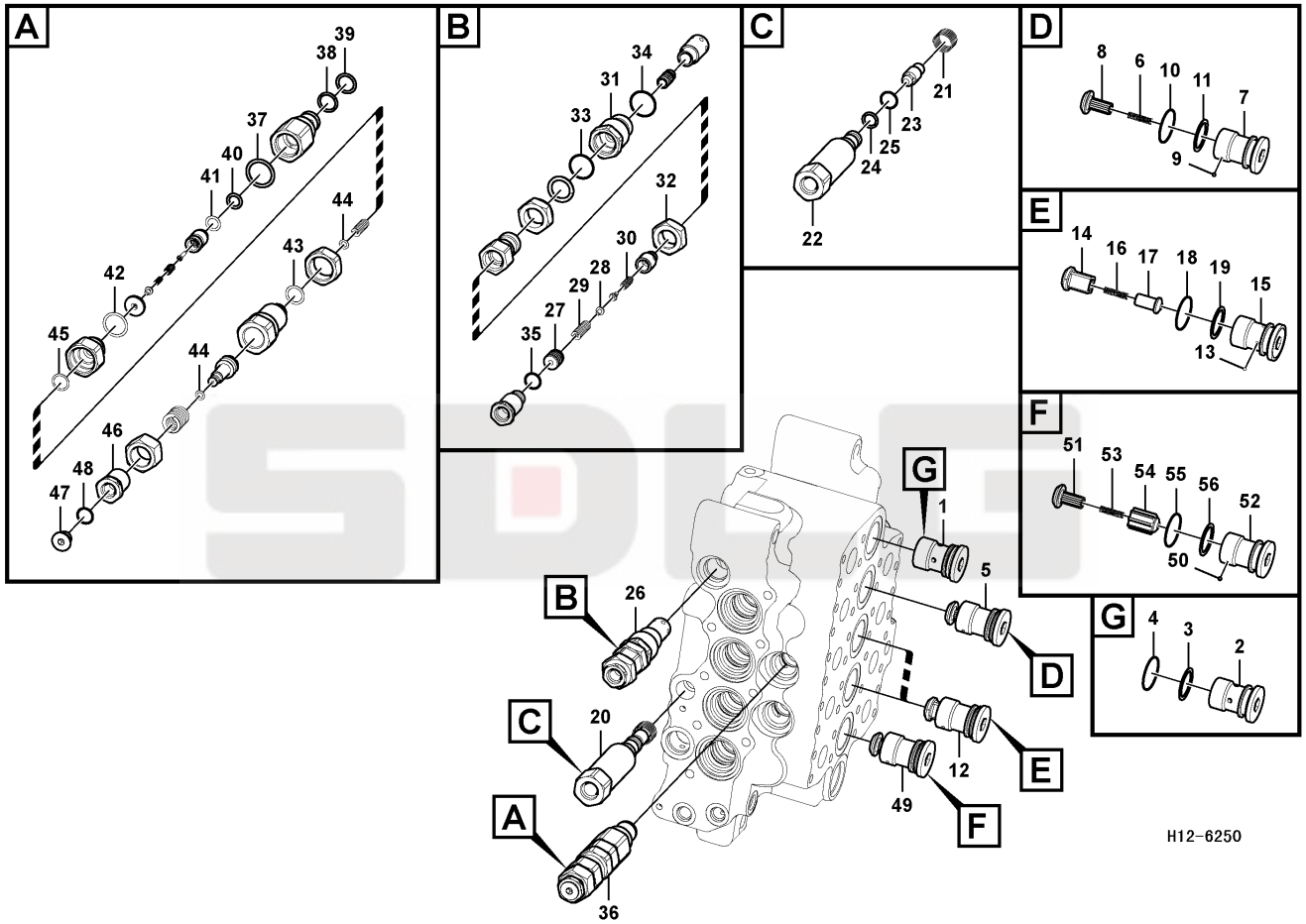

Key	Part No.	Description	Spare parts Y/N	Qty	Remarks
31	kongbai	Kongbai	N	1	
32	11211981	Lock nut	N	1	
33	11211982	O-ring	Y	1	
34	11210138	O-ring	Y	1	
35	11210133	O-ring	Y	1	
36	11210783	Relief valve	N	1	
37	11210008	O-ring	Y	1	
38	11211068	Ring	Y	1	
39	11210136	O-ring	Y	1	
40	11211957	Ring	Y	1	
41	11211958	O-ring	Y	1	
42	11210146	O-ring	Y	1	
43	11211985	O-ring	Y	1	
44	11211983	O-ring	Y	2	
45	11211984	O-ring	Y	1	
46	kongbai	Kongbai	N	1	
47	11211467	Cap	Y	1	
48	11210133	O-ring	Y	1	
49	11211974	Valve	N	1	
50	11211468	Ball	Y	1	
51	11211433	Valve	Y	1	
52	11211450	Plug	Y	1	
53	11211454	Spring	Y	1	
54	11211432	Valve	Y	1	
55	11210142	O-ring	Y	1	
56	11211070	Ring	Y	1	
57	11210322	Sealing kit	Y	1	
58	11214528	Control valve	N	1	

Control valve

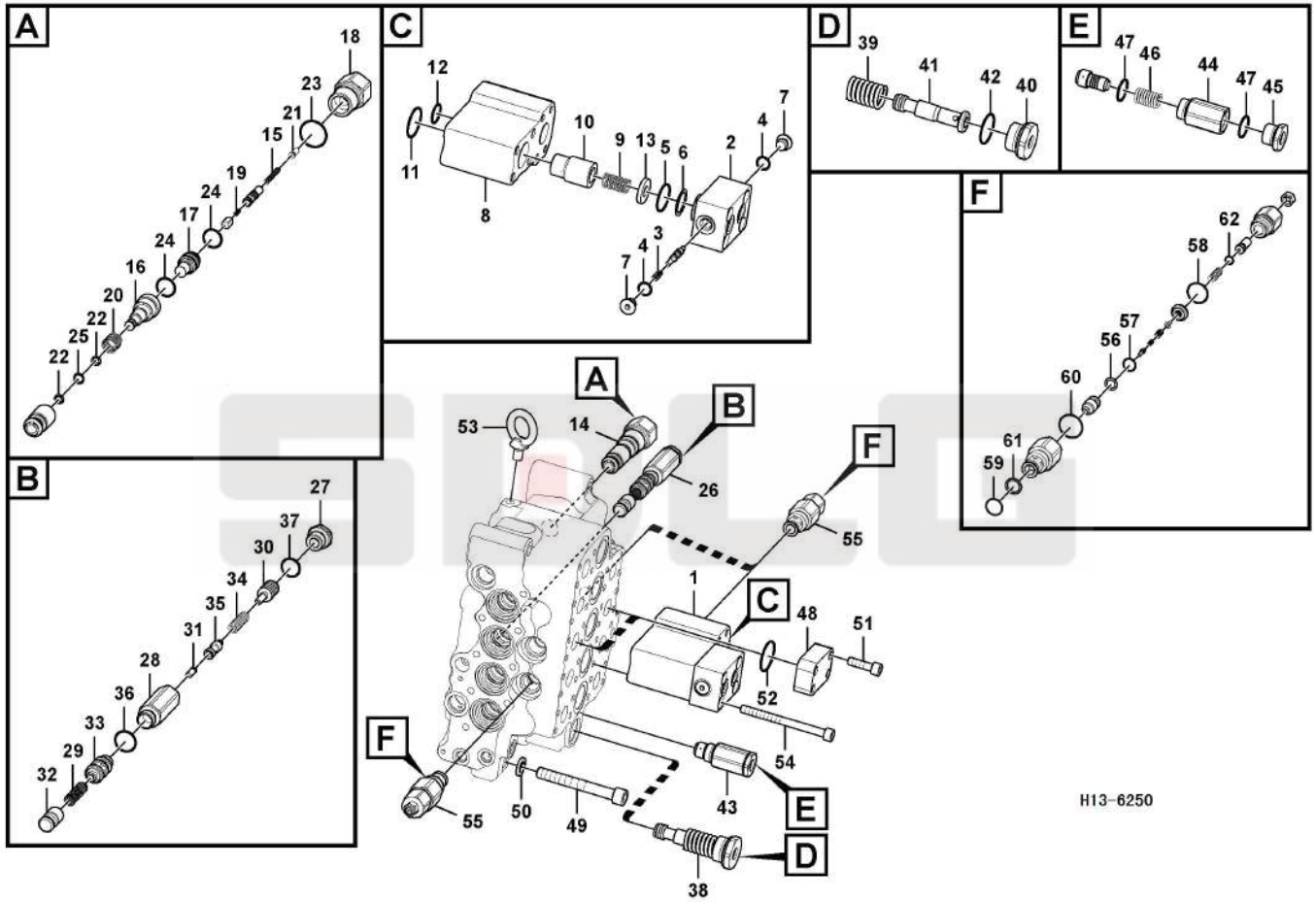

Key	Part No.	Description	Spare parts Y/N	Qty	Remarks
1	11220356	Valve seat	Y	1	
2	kongbai	Kongbai	N	1	
3	11212000	Spring	Y	1	
4	11210133	O-ring	Y	2	
5	11210142	O-ring	Y	1	
6	11211070	Ring	Y	1	
7	11211467	Cap	Y	2	
8	11220895	Valve body	Y	1	
9	11211998	Spring	Y	1	
10	11211990	Sleeve	Y	1	
11	11210144	O-ring	Y	1	
12	11210166	O-ring	Y	1	
13	11212001	Spring seat	Y	1	
14	11216869	Valve	Y	1	
15	11211999	Spring	Y	1	
16	11211991	Sleeve	Y	1	
17	11211992	Sleeve	Y	1	
18	11211994	Cap	N	1	
19	11211971	Spring	Y	1	
20	11211997	Spring	Y	1	
21	11211989	Control plunger	Y	1	
22	11212002	Ring	Y	2	
23	11210142	O-ring	Y	1	
24	11210166	O-ring	Y	2	
25	11212381	O-ring	Y	1	
26	11210465	Valve	Y	1	
27	11211993	Plug	Y	1	
28	11211995	Cap	Y	1	
29	11211996	Spring	Y	1	
30	kongbai	Kongbai	N	1	

Control valve

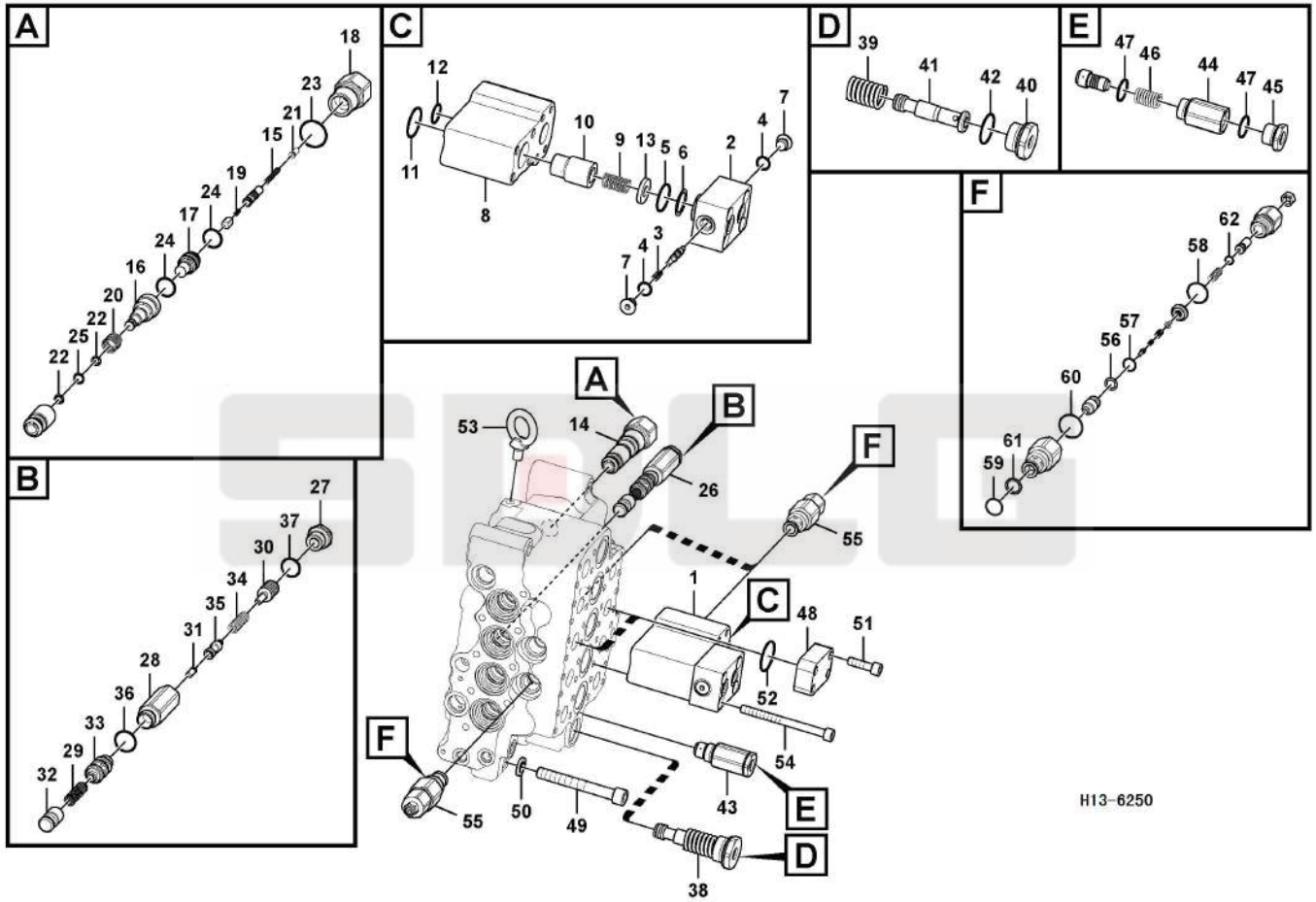

Key	Part No.	Description	Spare parts Y/N	Qty	Remarks
31	11211989	Control plunger	Y	1	
32	11212006	Control plunger	Y	1	
33	kongbai	Kongbai	N	1	
34	11212007	Spring	N	1	
35	kongbai	Kongbai	N	1	
36	11210138	O-ring	Y	1	
37	11210166	O-ring	Y	1	
38	11212005	Valve	Y	1	
39	11211460	Spring	Y	1	
40	11211439	Cap	Y	1	
41	11211426	Coil	Y	1	
42	11210144	O-ring	Y	1	
43	11211954	Valve	Y	1	
44	kongbai	Kongbai	N	1	
45	11211955	Cap	Y	1	
46	11211956	Spring	Y	1	
47	11210138	O-ring	Y	2	
48	11211428	Flange plate	Y	2	
49	11210246	Hex. socket screw	Y	2	
50	11223109	Spring washer	Y	2	
51	11210081	Hex. socket screw	Y	8	
52	11221049	O-ring	N	2	
53	11212004	Eye bolt	Y	1	
54	11210216	Hex. socket screw	Y	4	
55	11210555	Valve	Y	3	
56	11211957	Ring	Y	1	
57	11211958	O-ring	Y	1	
58	11210146	O-ring	Y	1	
59	11210136	O-ring	Y	1	
60	11210008	O-ring	Y	1	

Control valve

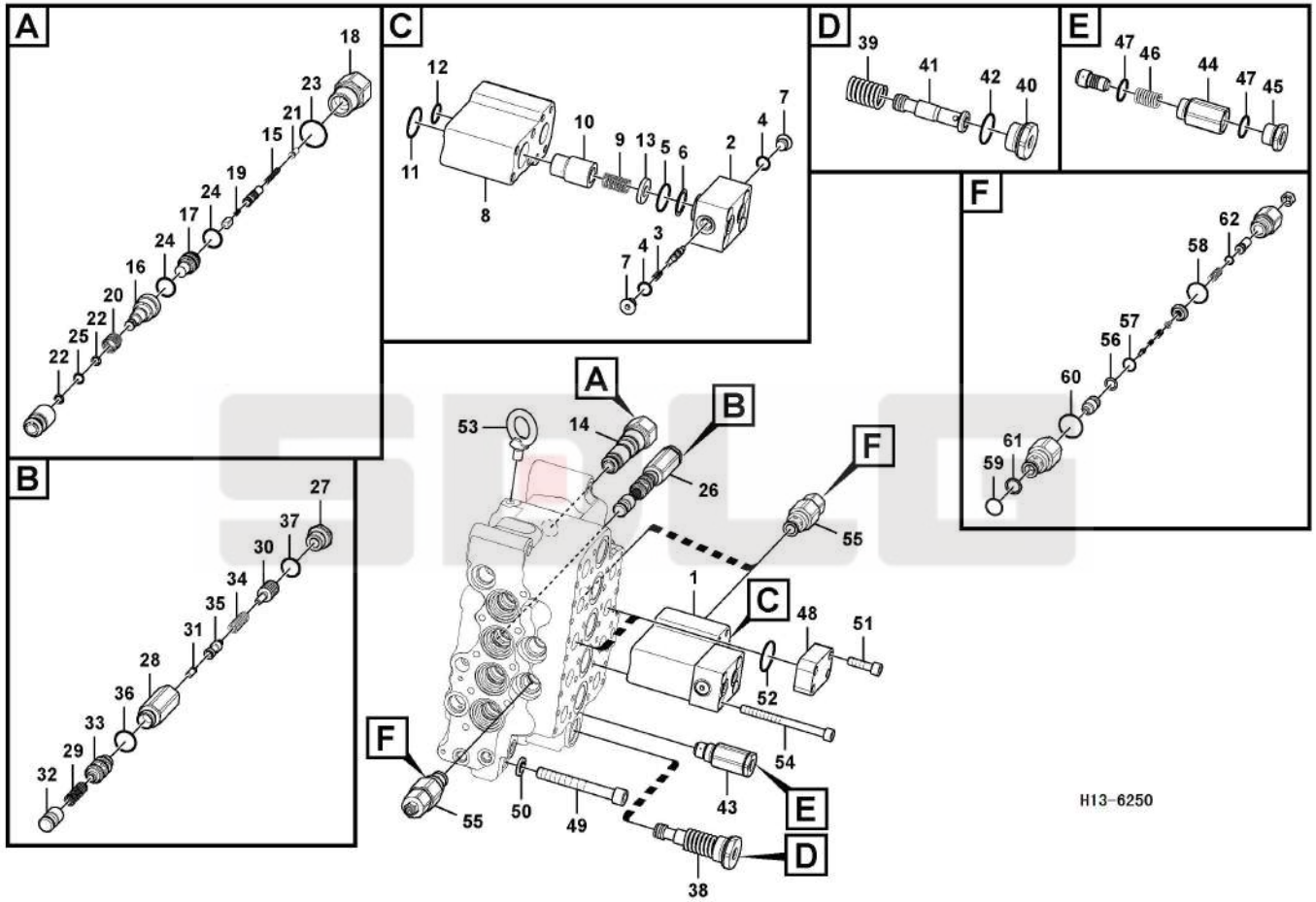

Key	Part No.	Description	Spare parts Y/N	Qty	Remarks
61	11211068	Ring	Y	1	
62	11210131	O-ring	Y	1	
63	11210322	Sealing kit	Y	1	
64	11214528	Control valve	N	1	

Pump link

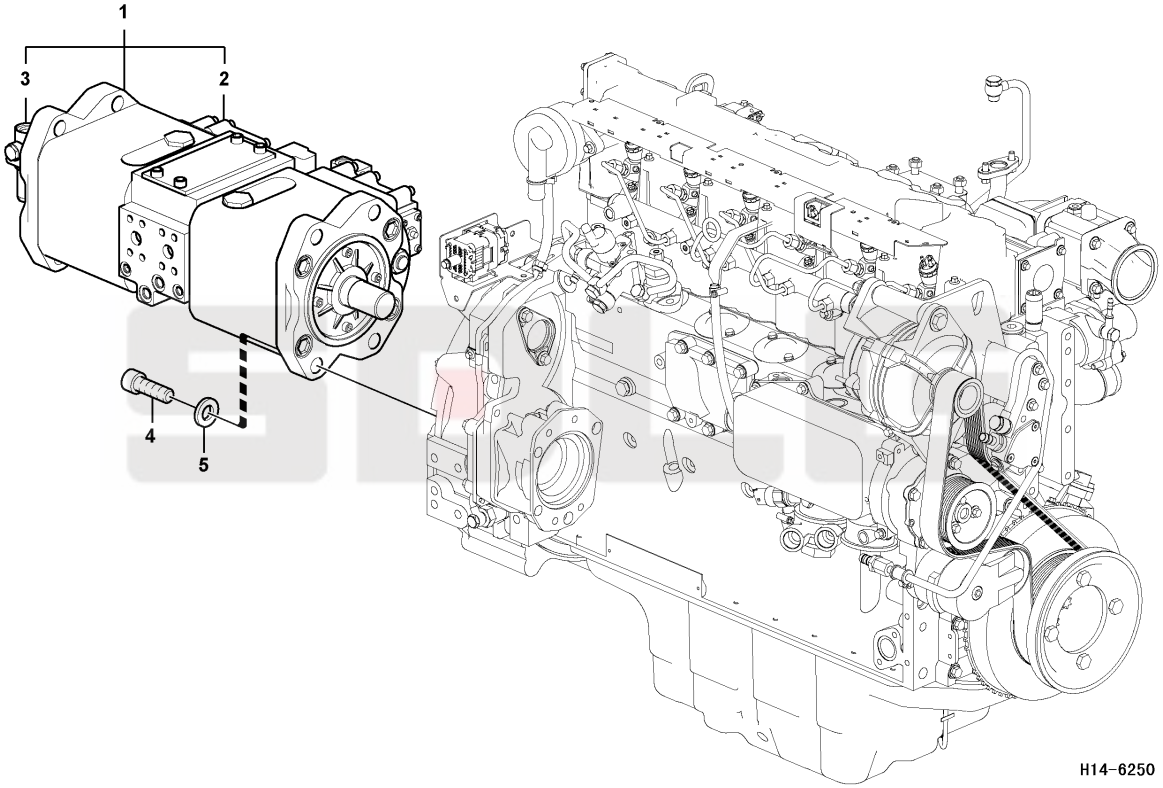

Key	Part No.	Description	Spare parts Y/N	Qty	Remarks
1	11217739	Hydraulic pump	Y	1	
2	11212846	Regulator control	Y	2	
3	11210736	Gear pump	Y	1	
4	11210156	Hex. socket screw	Y	4	
5	11210200	Plain washer	Y	4	

Hydraulic pump

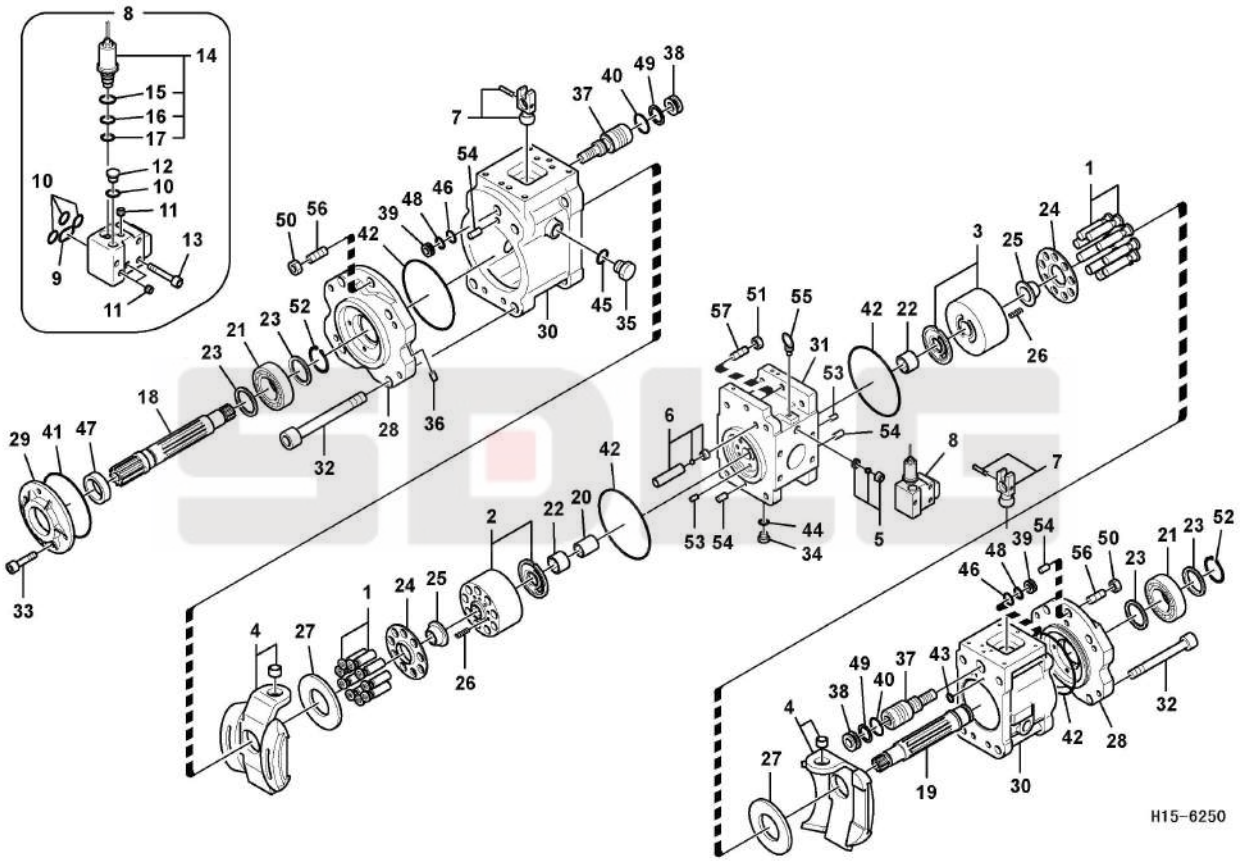

Key	Part No.	Description	Spare parts Y/N	Qty	Remarks
1	11210998	Piston	Y	2	
2	11210818	Cylinder	Y	1	
3	11210819	Cylinder	Y	1	
4	11211494	Plate	Y	2	
5	11214096	Valve	Y	2	
6	11214097	Valve	Y	2	
7	11211493	Pin	Y	1	
8	11218856	Check valve	Y	1	
9	11210708	O-ring	Y	1	
10	11210706	O-ring	Y	4	
11	11210873	Plug	Y	3	
12	11211697	Plug	N	1	
13	11211550	Hex. socket screw	Y	3	
14	11210894	Valve	Y	1	
15	11210164	O-ring	Y	1	
16	11211903	O-ring	Y	1	
17	11211904	O-ring	Y	1	
18	11211486	Main shaft	Y	1	
19	11211485	Shaft	Y	1	
20	11211489	Connector	Y	1	
21	11210729	Bearing	Y	2	
22	11210730	Bearing	Y	2	
23	11211497	Spacer	Y	4	
24	11210776	Plate	Y	2	
25	11210731	Bushing	Y	2	
26	11211492	Spring	Y	18	
27	11211538	Plate	Y	2	
28	kongbai	Kongbai	N	2	
29	11211487	End cover	Y	1	
30	11210775	Casing	Y	2	

Hydraulic pump

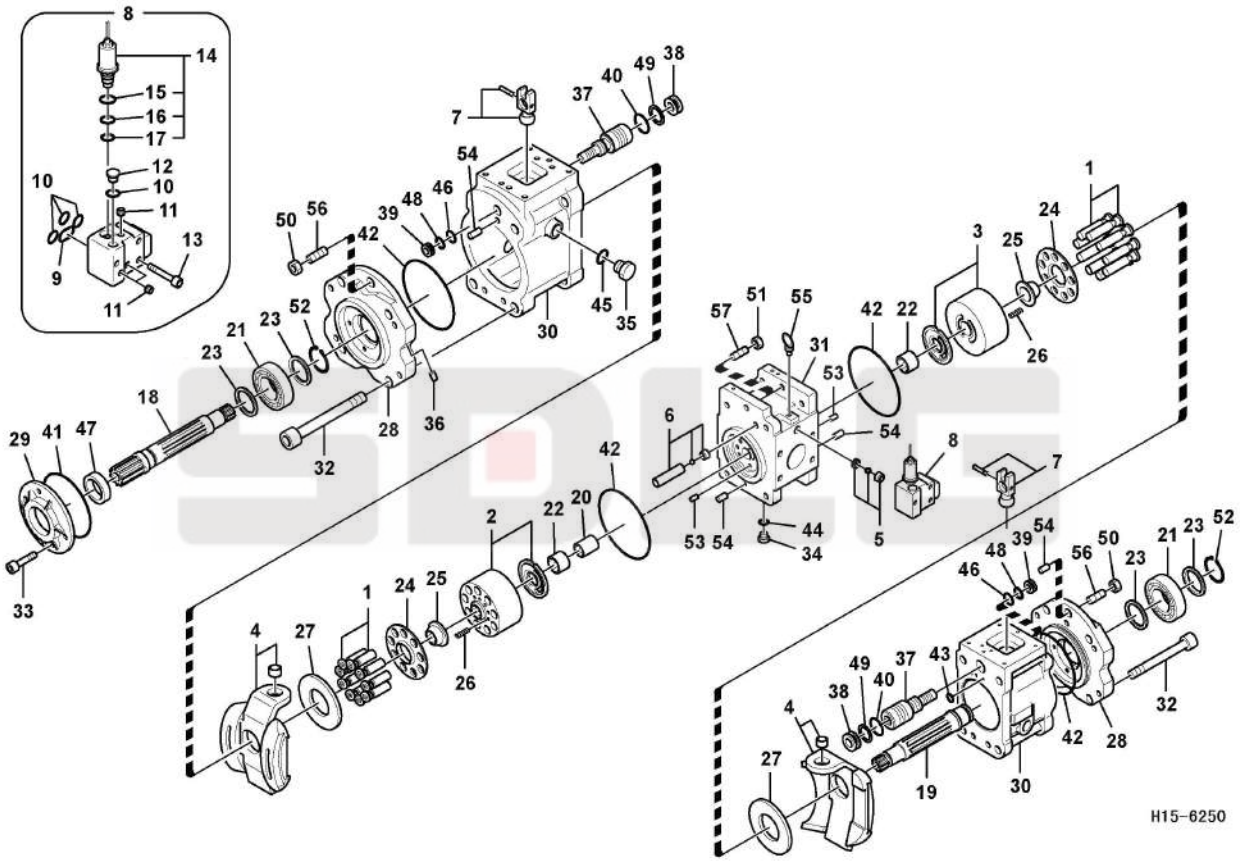

Key	Part No.	Description	Spare parts Y/N	Qty	Remarks
31	11224838	Valve block	Y	1	
32	11211490	Hex. socket screw	Y	8	
33	11210245	Hex. socket screw	Y	4	
34	11211697	Plug	N	3	
35	11211701	Plug	Y	4	
36	11222942	Plug	Y	21	
37	11210772	Piston	Y	2	
38	11210997	Plate	Y	2	
39	11211488	Rubber collar	Y	2	
40	11210171	O-ring	Y	2	
41	11210732	O-ring	Y	1	
42	11210733	O-ring	Y	4	
43	11210704	O-ring	Y	16	
44	11210706	O-ring	Y	4	
45	11210712	O-ring	Y	4	
46	11210709	O-ring	Y	2	
47	11210996	Sealing	Y	1	
48	11218717	Ring	Y	2	
49	11211793	Ring	Y	2	
50	11211544	Nut	Y	2	
51	11210110	Hexagon nut	Y	2	
52	11211902	Retaining ring	Y	2	
53	11211557	Pin	Y	2	
54	11211415	Spring pin	Y	4	
55	11214803	Screw	Y	2	
56	11211559	Bolt	Y	2	
57	11211491	Screw	Y	2	
58	11210844	Sealing kit	Y	1	
59	11217739	Hydraulic pump	Y	1	

Pressure regulator

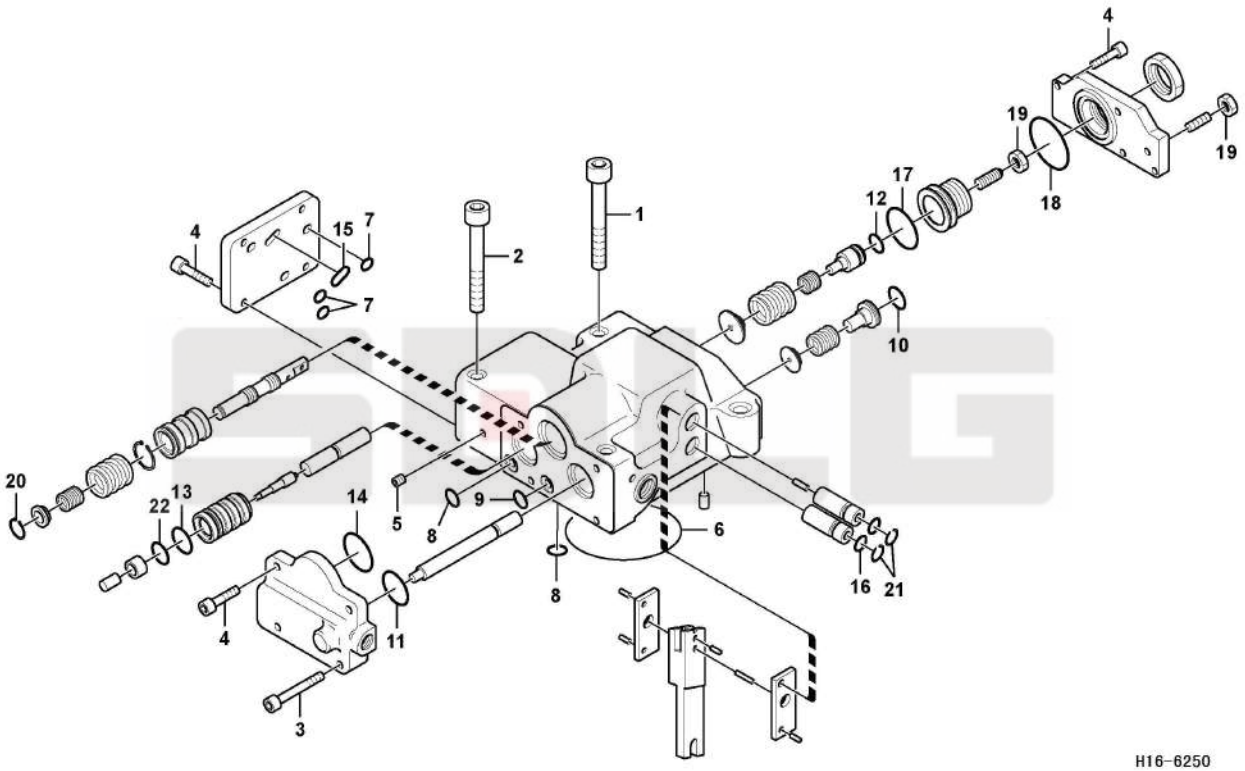

Key	Part No.	Description	Spare parts Y/N	Qty	Remarks
1	11211551	Hex. socket screw	Y	2	
2	11211552	Bolt	Y	2	
3	11211549	Bolt	Y	2	
4	11211548	Bolt	Y	10	
5	11222942	Plug	Y	5	
6	11210716	O-ring	Y	1	
7	11210703	O-ring	Y	3	
8	11210704	O-ring	Y	9	
9	11210705	O-ring	Y	1	
10	11210709	O-ring	Y	1	
11	11210711	O-ring	Y	1	
12	11210723	O-ring	Y	1	
13	11210710	O-ring	Y	1	
14	11210714	O-ring	Y	1	
15	11210707	O-ring	N	1	
16	11210706	O-ring	Y	2	
17	11210713	O-ring	Y	1	
18	11210715	O-ring	Y	1	
19	11211627	Nut	Y	2	
20	11211600	Sealing ring	Y	1	
21	11210005	Retaining ring	Y	2	
22	11210708	O-ring	Y	1	
23	11210907	Sealing kit	Y	1	
24	11212846	Regulator control	Y	2	

Hydraulic pump

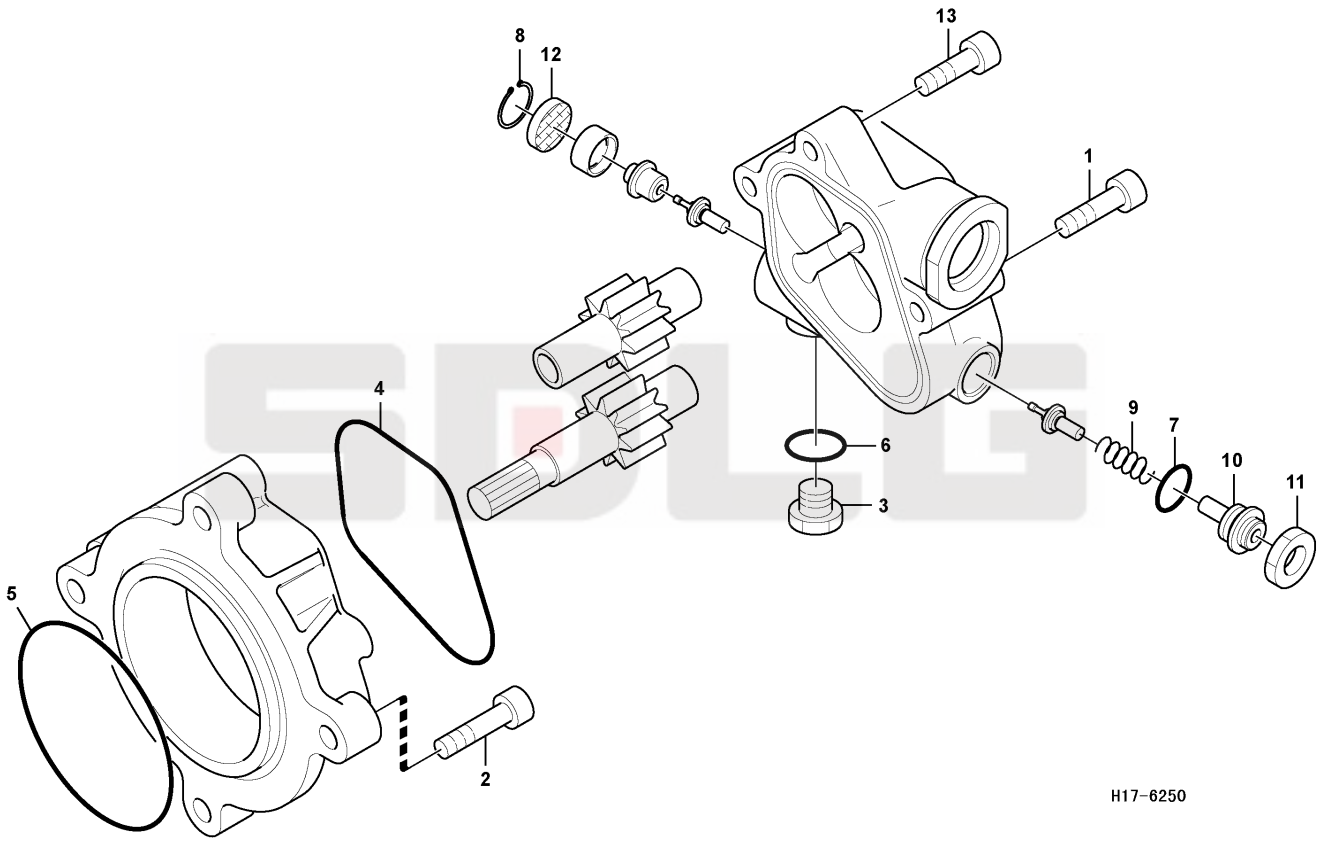

Key	Part No.	Description	Spare parts Y/N	Qty	Remarks
1	11211556	Screw	N	2	
2	11210245	Hex. socket screw	Y	4	
3	11211697	Plug	N	1	
4	11211416	Sealing ring	Y	1	
5	11210732	O-ring	Y	1	
6	11210133	O-ring	Y	1	
7	11210136	O-ring	Y	1	
8	11211546	Retaining ring	N	1	
9	11210722	Spring	N	1	
10	11210721	Screw	N	1	
11	11211412	Lock nut	N	1	
12	11211482	Filter netting	Y	1	
13	11211555	Screw	N	2	
14	11210737	Gear pump	Y	1	
15	11210736	Gear pump	Y	1	

Control valve hose assembly

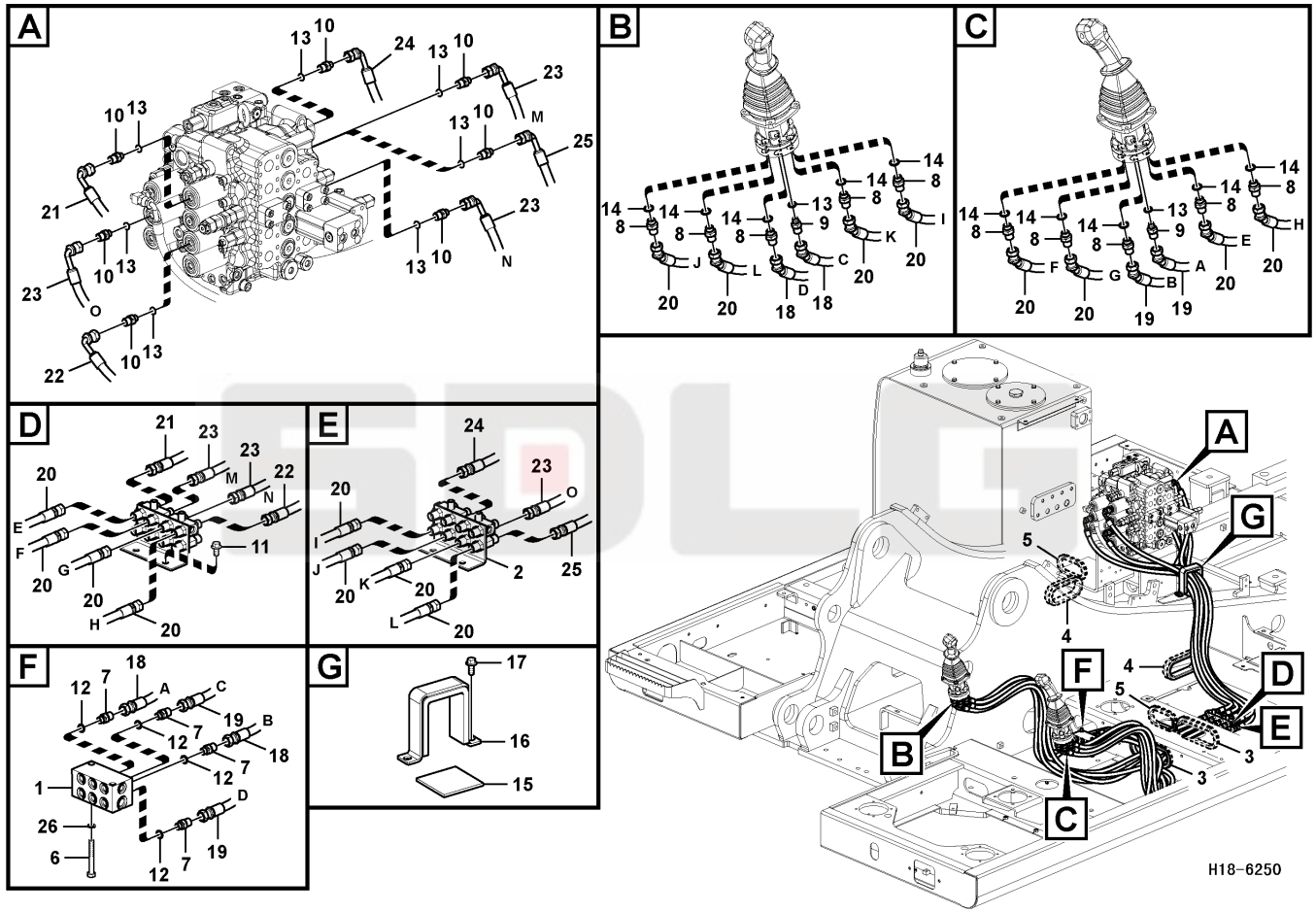

Key	Part No.	Description	Spare parts Y/N	Qty	Remarks
1	11210905	Block	Y	1	
2	11210294	Valve	Y	1	
3	11210330	Grommet	Y	2	
4	11210398	Grommet	Y	2	
5	11210603	Grommet	Y	2	
6	11210127	Hexagon screw	Y	2	
7	11211685	Connector	Y	4	
8	11211673	Connector	Y	10	
9	11211315	Connector	Y	2	
10	11211678	Nipple	Y	7	
11	11210034	Flange screw	Y	2	
12	11210006	O-ring	Y	4	
13	11210133	O-ring	Y	9	
14	11210135	O-ring	Y	10	
15	11210463	Sponge	Y	1	
16	11210402	Clamp	Y	1	
17	11210031	Flange screw	Y	2	
18	11217079	Hose assembly	Y	2	
19	11217080	Hose assembly	Y	2	
20	11217081	Hose assembly	Y	8	
21	14400685	Hose assembly	Y	1	
22	11217091	Hose assembly	N	1	
23	11217092	Hose assembly	Y	3	
24	11217356	Hose	N	1	
25	11217357	Hose	Y	1	
26	11210064	Spring washer	Y	2	

Control valve hose assembly

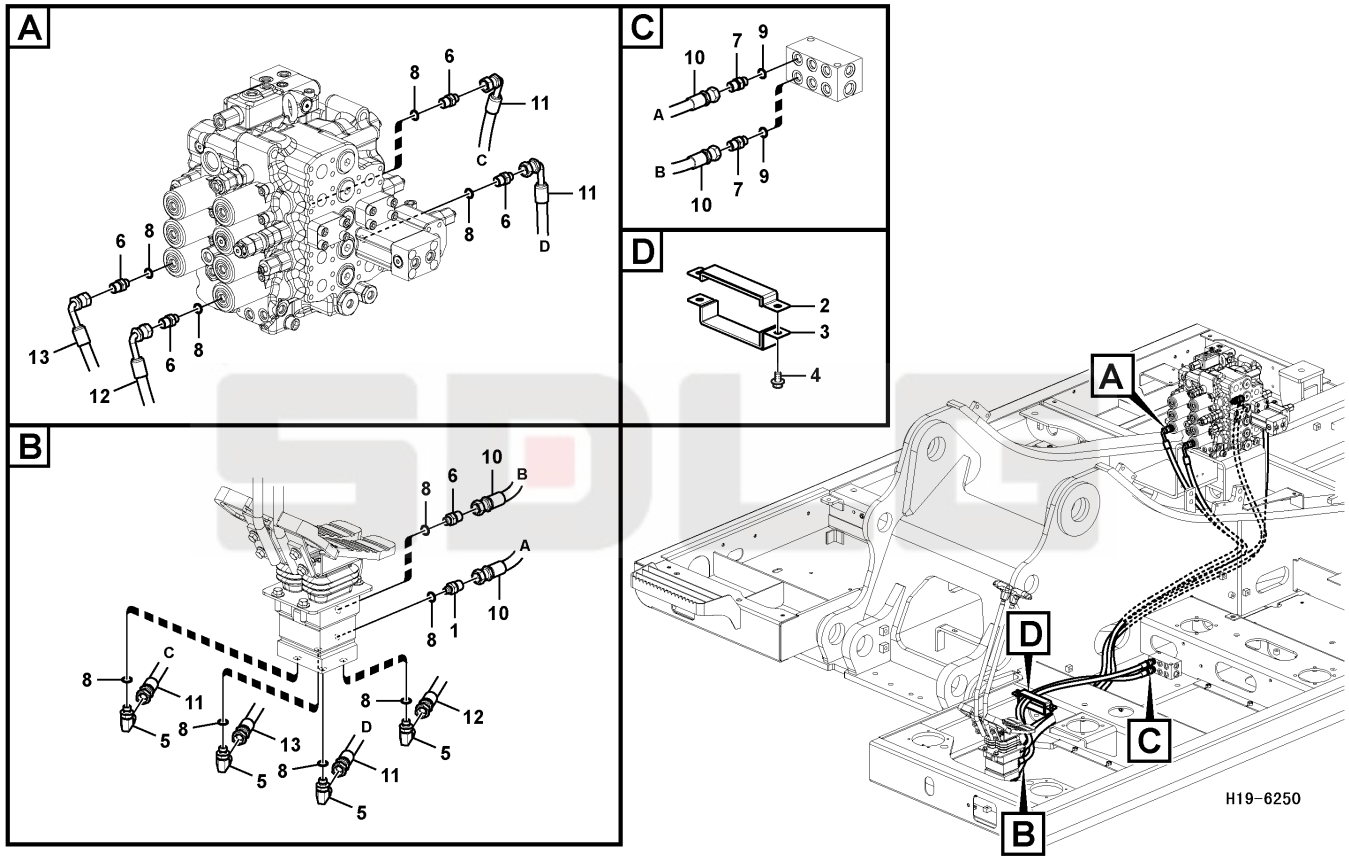

Key	Part No.	Description	Spare parts Y/N	Qty	Remarks
1	11211315	Connector	Y	1	
2	11210861	Clamp	Y	1	
3	11210899	Plate	Y	1	
4	11210036	Flange screw	Y	2	
5	11211693	Nipple	Y	4	
6	11211678	Nipple	Y	5	
7	11211685	Connector	Y	2	
8	11210133	O-ring	Y	10	
9	11210006	O-ring	Y	2	
10	11217100	Hose assembly	N	2	
11	11217363	Hose	Y	2	
12	11217360	Hose	Y	1	
13	11217361	Hose	Y	1	

Control valve hose assembly

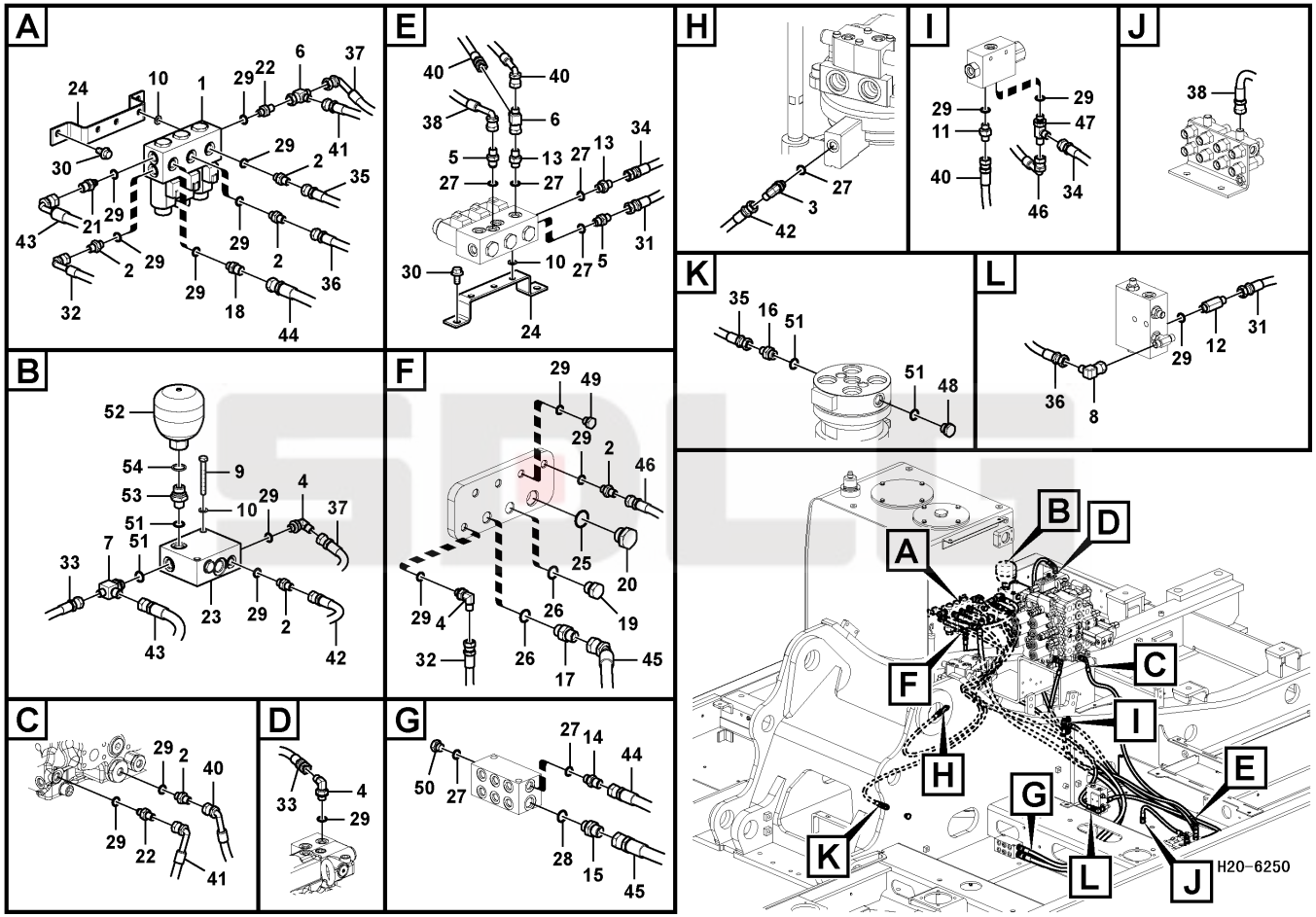

Key	Part No.	Description	Spare parts Y/N	Qty	Remarks
1	11211291	Valve	N	1	
2	11211672	Connector	Y	7	
3	11211694	Nipple	Y	1	
4	11211689	Nipple	Y	2	
5	11210550	Nipple	Y	2	
6	11211670	Connector	Y	2	
7	11211027	T-nipple	Y	1	
8	11211669	Connector	N	1	
9	11210121	Hexagon screw	Y	2	
10	11210218	Washer	Y	6	
11	11211666	Connector	Y	1	
12	11211677	Connector	Y	1	
13	11211684	Nipple	Y	2	
14	11211685	Connector	Y	1	
15	11211686	Nipple	Y	1	
16	11211679	Connector	Y	1	
17	11211674	Connector	Y	1	
18	11211678	Nipple	Y	1	
19	11211700	Plug	Y	1	
20	11211701	Plug	Y	1	
21	11211315	Connector	Y	1	
22	11211316	Connector	Y	2	
23	11210672	Block	Y	1	
24	kongbai	Kongbai	N	2	
25	11210141	O-ring	Y	1	
26	11210166	O-ring	Y	2	
27	11210006	O-ring	Y	7	
28	11210007	O-ring	Y	1	
29	11210133	O-ring	Y	16	
30	11210034	Flange screw	Y	4	

Control valve hose assembly

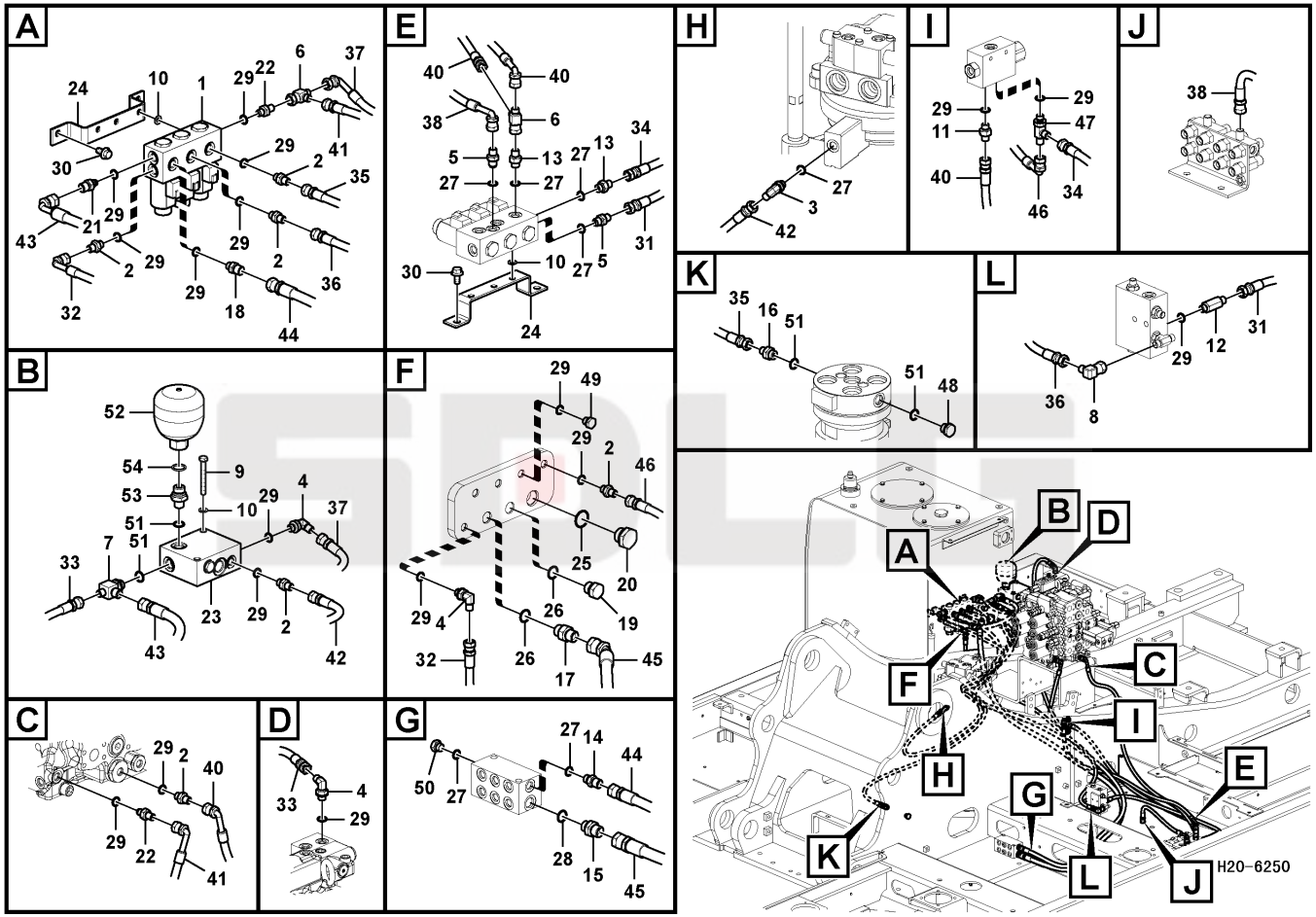

Key	Part No.	Description	Spare parts Y/N	Qty	Remarks
31	11217049	Hose assembly	N	1	
32	11217060	Hose	N	1	
33	11217337	Hose	Y	1	
34	11217300	Hose	N	1	
35	11217302	Hose	Y	1	
36	11217303	Hose	Y	1	
37	14400546	Hose assembly	Y	1	
38	11217055	Hose assembly	N	1	
39	kongbai	Kongbai	N	1	
40	11217088	Hose assembly	N	2	
41	11217062	Hose assembly	N	1	
42	11217304	Hose	Y	1	
43	11217063	Hose assembly	N	1	
44	11217364	Hose	Y	1	
45	11217366	Hose	Y	1	
46	11217086	Hose assembly	N	1	
47	11211667	Connector	Y	1	
48	kongbai	Kongbai	N	1	
49	kongbai	Kongbai	N	1	
50	11211704	Plug	N	1	
51	11210135	O-ring	Y	3	
52	11210961	Pressure accumulator	N	1	
53	11211683	Nipple	Y	1	
54	11214821	Gasket	Y	1	

Control valve hose assembly

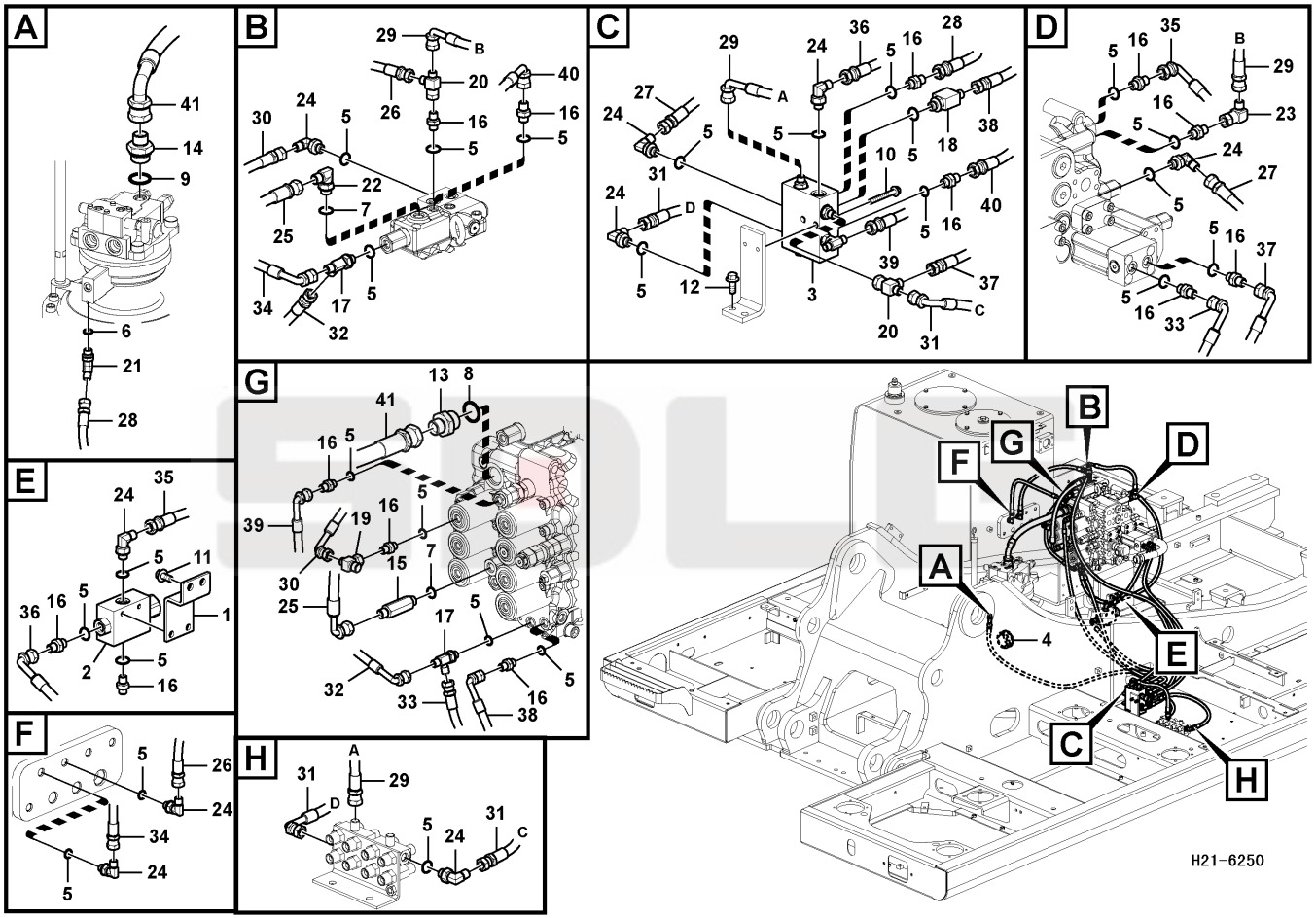

Key	Part No.	Description	Spare parts Y/N	Qty	Remarks
1	11219643	Bracket	N	1	
2	11211293	Valve	N	1	
3	11210922	Valve	Y	1	
4	11210607	Grommet	Y	1	
5	11210133	O-ring	Y	24	
6	11210006	O-ring	Y	1	
7	11210135	O-ring	Y	2	
8	11210144	O-ring	Y	1	
9	11210009	O-ring	Y	1	
10	11210076	Flange screw	Y	2	
11	11210034	Flange screw	Y	2	
12	11210032	Flange screw	Y	2	
13	11211681	Connector	Y	1	
14	11211688	Nipple	Y	1	
15	11211138	Connector	Y	1	
16	11211672	Connector	Y	13	
17	11211667	Connector	Y	2	
18	11211026	T-nipple	Y	1	
19	11211668	T-nipple	Y	1	
20	11211670	Connector	Y	2	
21	11212027	Elbow	Y	1	
22	11211690	Nipple	Y	1	
23	11211669	Connector	N	1	
24	11211689	Nipple	Y	9	
25	11217075	Hose assembly	Y	1	
26	11217311	Hose	N	1	
27	11217298	Hose	Y	1	
28	11217078	Hose assembly	Y	1	
29	11217082	Hose assembly	N	2	
30	11217055	Hose assembly	N	1	

Control valve hose assembly

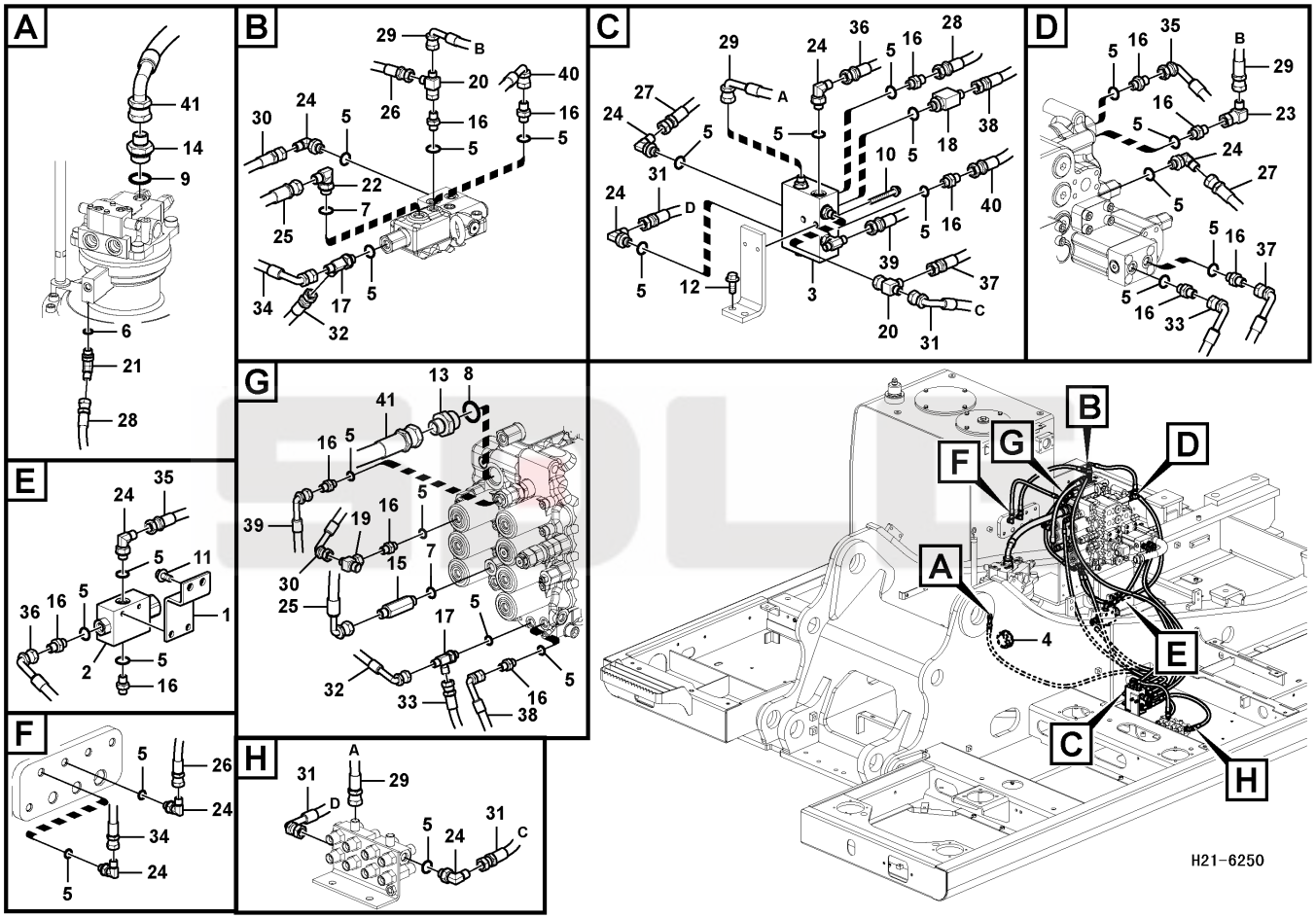

Key	Part No.	Description	Spare parts Y/N	Qty	Remarks
31	14400546	Hose assembly	Y	2	
32	14400039	Hose assembly	Y	1	
33	14400030	Hose assembly	Y	1	
34	11217322	Hose	N	1	
35	11217086	Hose assembly	N	1	
36	11217323	Hose	N	1	
37	11217324	Hose	N	1	
38	14400869	Hose assembly	Y	1	
39	11217329	Hose	Y	1	
40	11217330	Hose	N	1	
41	11217093	Hose assembly	Y	1	

Working hydraulic pump assembly

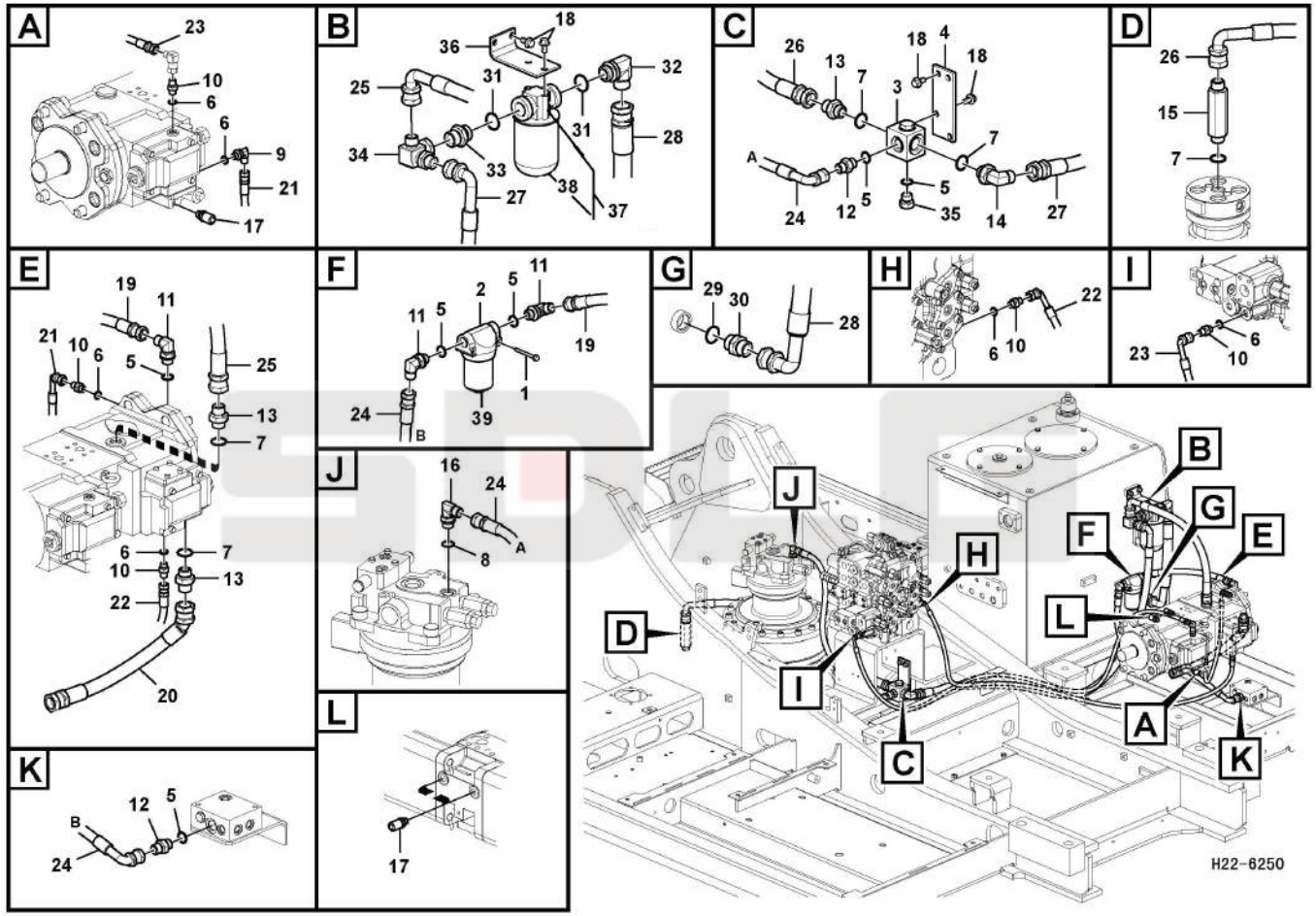

Key	Part No.	Description	Spare parts Y/N	Qty	Remarks
1	11214772	Screw	N	2	
2	14400377	Oil filter	Y	1	
3	11210746	Block	Y	1	
4	11219642	Plate	N	1	
5	11210166	O-ring	Y	6	
6	11210133	O-ring	Y	6	
7	11210141	O-ring	Y	5	
8	11211982	O-ring	Y	1	
9	11211317	Connector	Y	1	
10	11211672	Connector	Y	5	
11	11211691	Nipple	Y	3	
12	11211674	Connector	Y	2	
13	11211675	Nipple	Y	3	
14	11211692	Nipple	Y	1	
15	11212035	Nipple	N	1	
16	11212036	Nipple	Y	1	
17	11211013	Nipple	Y	3	
18	11210034	Flange screw	Y	8	
19	11217307	Hose	Y	1	
20	11217317	Hose	Y	1	
21	14400030	Hose assembly	Y	1	
22	11217345	Hose	N	1	
23	11217348	Hose	Y	1	
24	11217365	Hose	Y	2	
25	11217375	Hose	Y	1	
26	11217378	Hose	Y	1	
27	11217380	Hose	Y	1	
28	14400283	Hose assembly	Y	1	
29	11210144	O-ring	Y	1	
30	11211676	Connector	Y	1	

Working hydraulic pump assembly

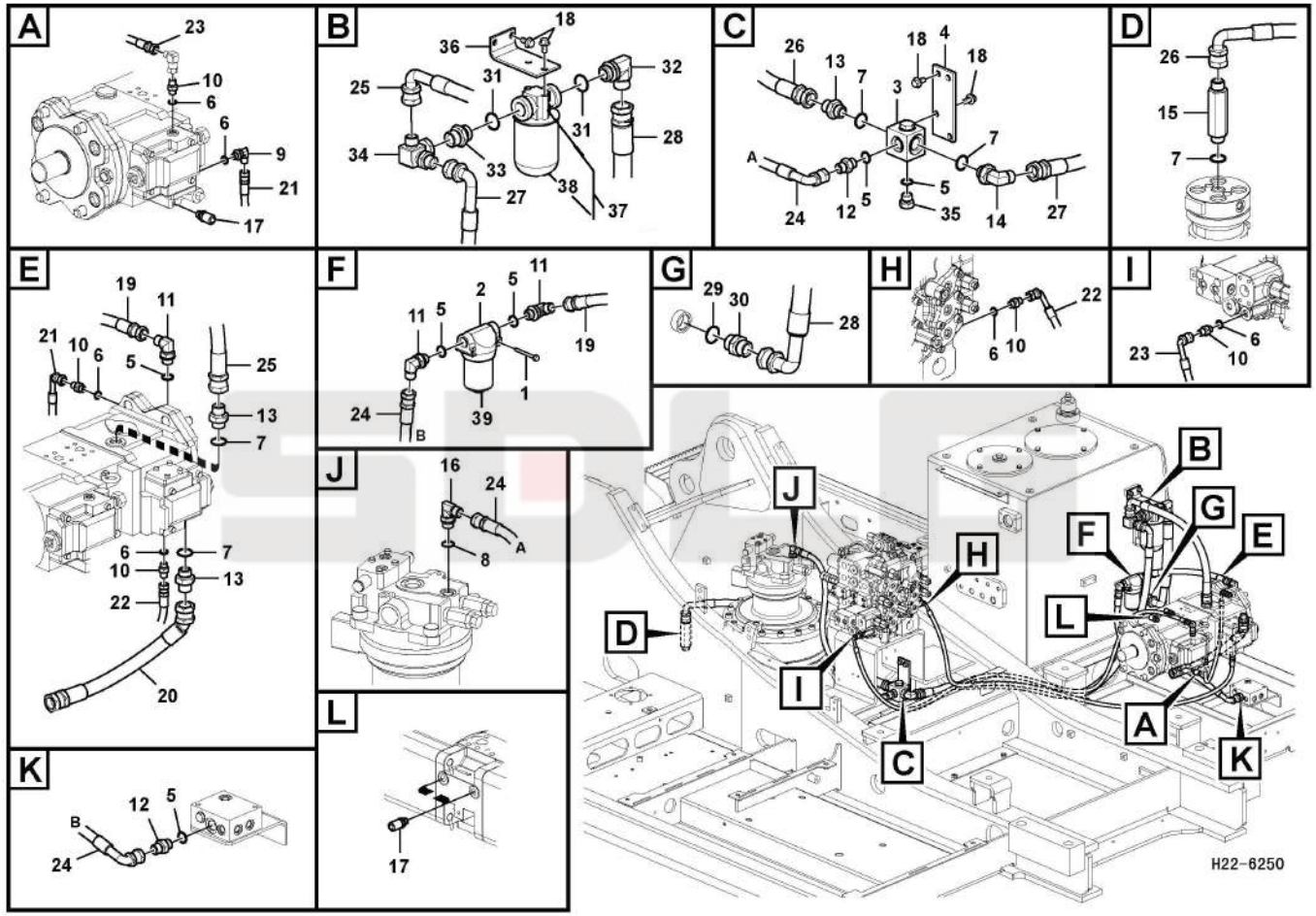

Key	Part No.	Description	Spare parts Y/N	Qty	Remarks
31	11210009	O-ring	Y	2	
32	11211696	Nipple	Y	1	
33	11211687	Nipple	Y	1	
34	11211671	Nipple	Y	1	
35	11211700	Plug	Y	1	
36	11210261	Bracket	Y	1	
37	14402365	Oil filter	Y	1	
38	11211213	Hydraulic fluid filter	Y	1	
39	11211360	Hydraulic fluid filter	Y	1	

Travel motor control valve pedal

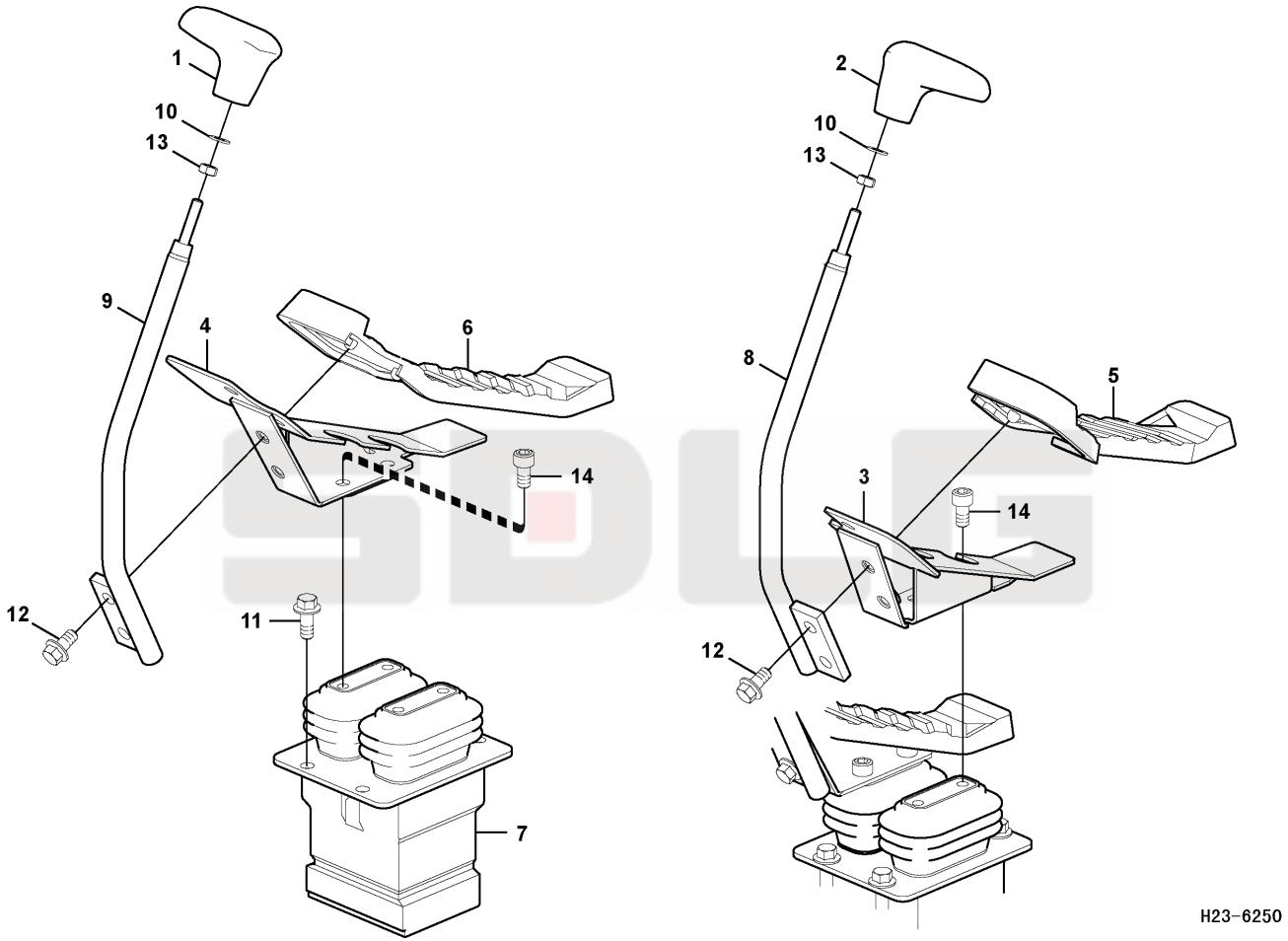

Key	Part No.	Description	Spare parts Y/N	Qty	Remarks
1	11216751	Knob	Y	1	
2	11216752	Knob	Y	1	
3	14402163	Pedal	Y	1	
4	14402164	Pedal	Y	1	
5	11216660	Cover	Y	1	
6	11216661	Cover	Y	1	
7	11214283	Pedal	N	1	
8	14402358	Control lever	Y	1	
9	14402359	Control lever	Y	1	
10	11210218	Washer	Y	2	
11	11210034	Flange screw	Y	4	
12	11210032	Flange screw	Y	4	
13	11210129	Hexagon nut	Y	2	
14	11210158	Hex. socket screw	Y	4	

Travel motor control valve pedal

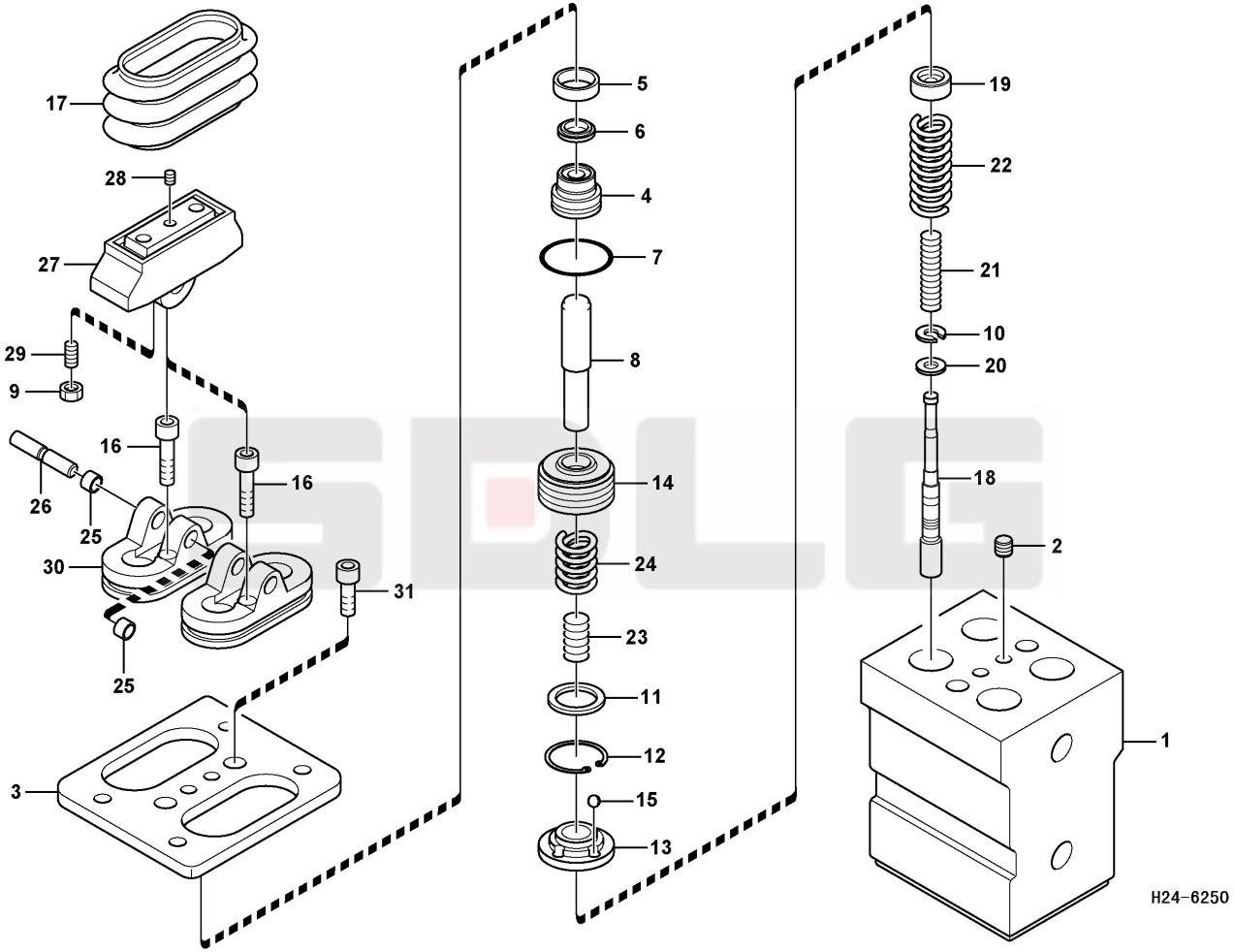

Key	Part No.	Description	Spare parts Y/N	Qty	Remarks
1	kongbai	Kongbai	N	1	
2	11210873	Plug	Y	2	
3	11210487	Attaching plate	Y	1	
4	11210488	Plug	Y	4	
5	11211561	Grease cup	Y	4	
6	11211577	Sealing ring	Y	4	
7	11212473	O-ring	Y	4	
8	11210486	Rod	Y	4	
9	11214749	Lock nut	Y	4	
10	11211509	Washer	Y	4	
11	11211562	Spring support	Y	4	
12	11211563	Lock ring kit	Y	4	
13	11211570	Bushing	Y	4	
14	11211569	Piston	Y	4	
15	11214741	Ball	Y	12	
16	11214742	Hexagon screw	Y	2	
17	11214750	Bellows	Y	2	
18	11210485	Slide	N	4	
19	11210484	Spring seat	Y	4	
20	11211501	Washer	Y	4	
21	11211508	Spring	N	4	
22	11214743	Spring	Y	4	
23	11214744	Spring	Y	4	
24	11214745	Spring	Y	4	
25	11214746	Bushing	Y	4	
26	11214747	Camshaft	Y	2	
27	11211504	Cam	Y	2	
28	11211601	Screw	Y	2	
29	11214748	Set screw	Y	4	
30	11210489	Cover	Y	2	

Travel motor control valve pedal

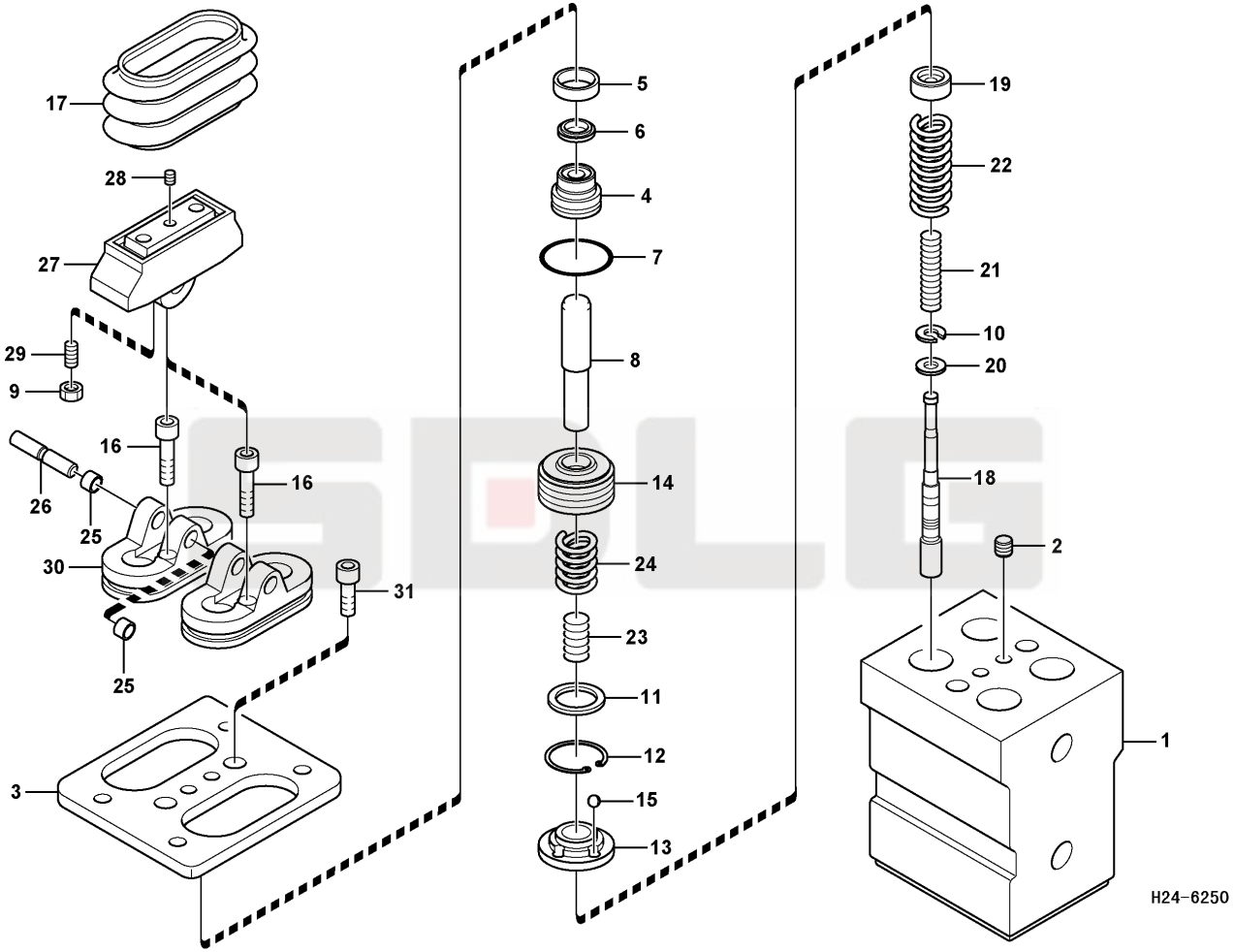

Key	Part No.	Description	Spare parts Y/N	Qty	Remarks
31	11210245	Hex. socket screw	Y	2	
32	11211566	Sealing kit	N	1	
33	11214283	Pedal	N	1	

Servo system

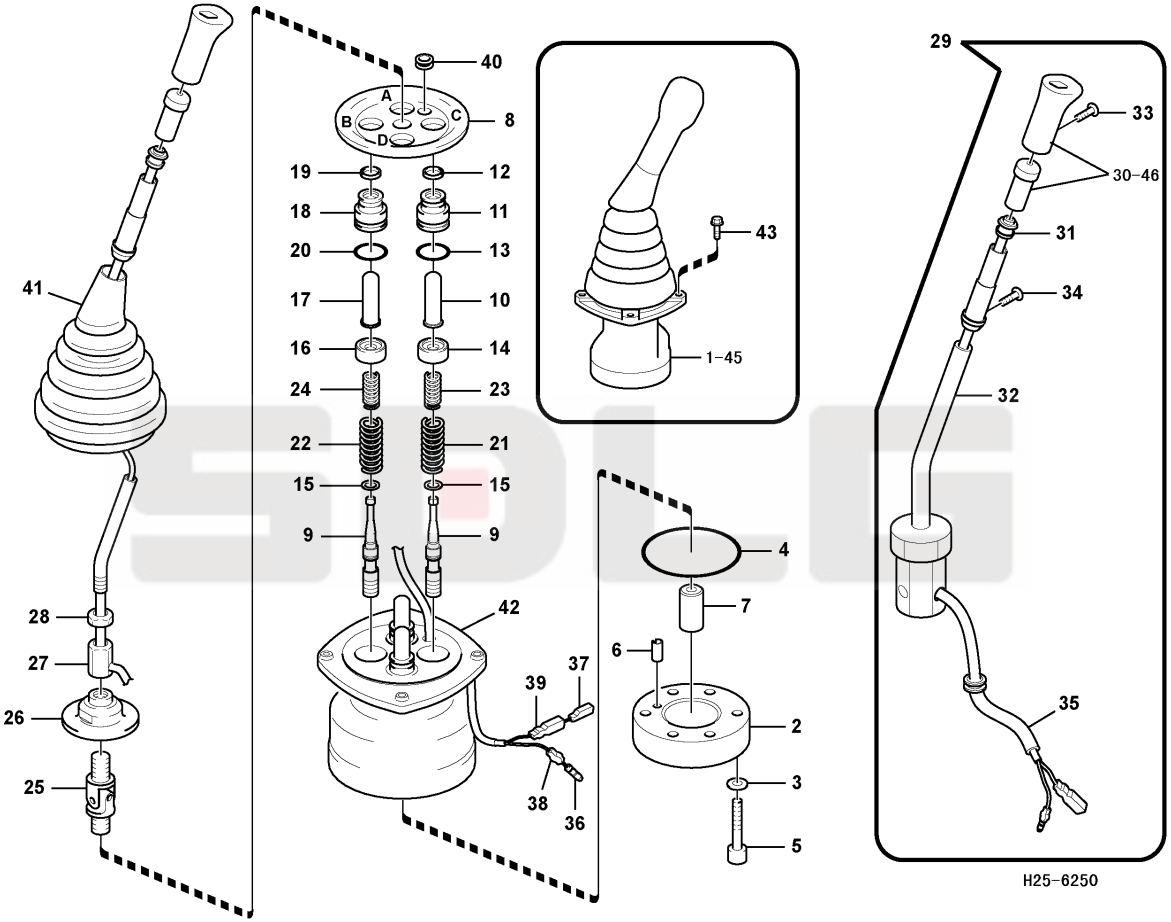

Key	Part No.	Description	Spare parts Y/N	Qty	Remarks
1	11210856	Control valve	N	1	
2	11211597	Plate	Y	1	
3	11211510	Washer	Y	2	
4	11211590	O-ring	Y	1	
5	11210244	Screw	Y	2	
6	11211553	Spring pin	Y	1	
7	11211593	Bushing	Y	1	
8	11211596	Plate	Y	1	
9	11210252	Slide	N	4	
10	11211511	Rod	N	2	
11	11211572	Plug	Y	2	
12	11211515	Sealing ring	Y	2	
13	11210137	O-ring	Y	2	
14	11211584	Spring support	Y	2	
15	11211509	Washer	Y	4	
16	11211583	Spring support	Y	2	
17	11211512	Rod	N	2	
18	11211572	Plug	Y	2	
19	11211515	Sealing ring	Y	2	
20	11210137	O-ring	Y	2	
21	11210774	Spring	Y	2	
22	11210432	Spring	Y	2	
23	11211585	Spring	Y	2	
24	11211586	Spring	Y	2	
25	11211514	Constant velocity joint	Y	1	
26	11211595	Plate	Y	1	
27	11211516	Nut	Y	1	
28	11211513	Lock nut	Y	1	
29	11211591	Handle	Y	1	
30	11211592	Knob	Y	1	

Servo system

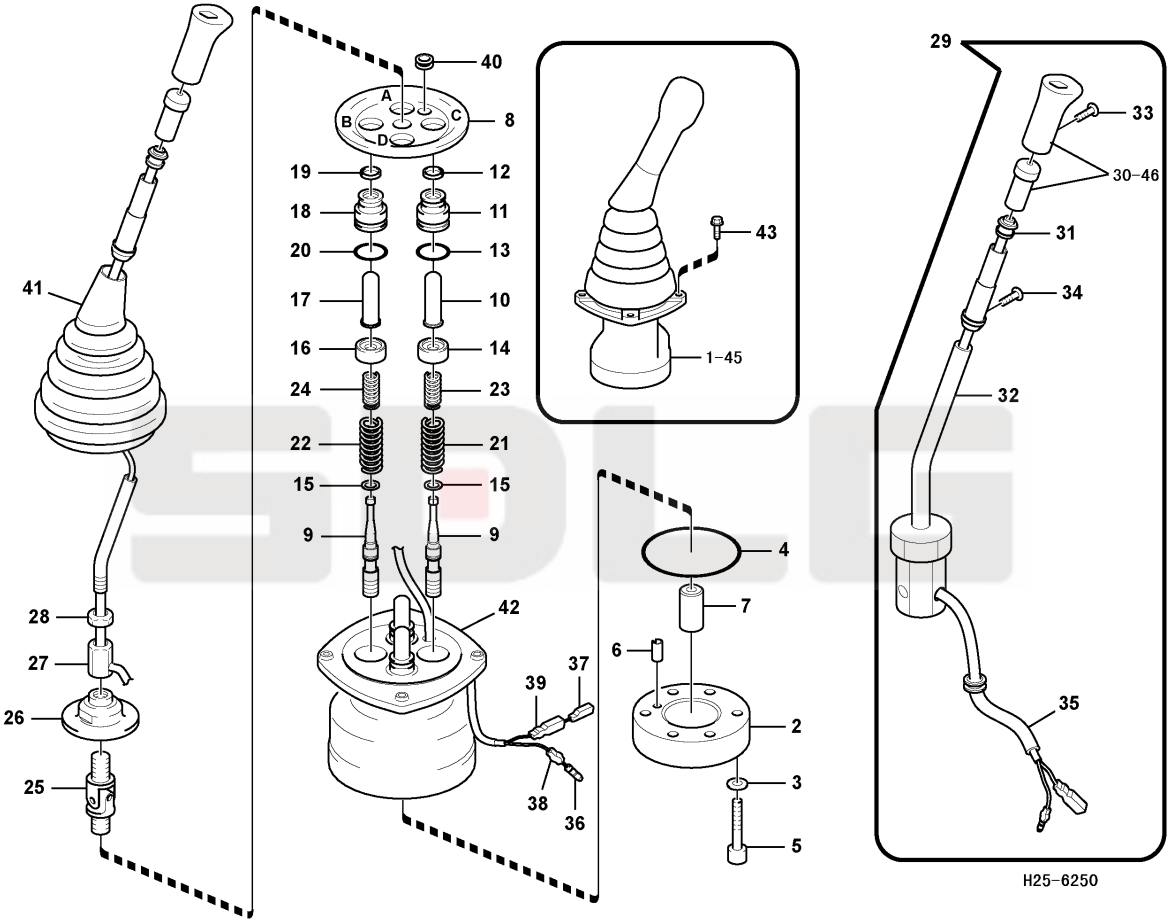

Key	Part No.	Description	Spare parts Y/N	Qty	Remarks
31	11211588	Switch	Y	1	
32	11211582	Bar	Y	1	
33	11211579	Screw	Y	1	
34	11211571	Screw	Y	2	
35	11211580	Tube	Y	1	
36	11211517	Terminal	Y	1	
37	11211518	Terminal	Y	1	
38	11210770	Sleeve	Y	1	
39	11210771	Sleeve	Y	1	
40	11211594	Bushing	Y	1	
41	11211568	Bellows	Y	1	
42	11211589	Valve body	N	1	
43	11210041	Flange screw	Y	8	
44	11211587	Sealing kit	Y	1	
45	11210857	Control valve	N	1	
46	11210253	Knob	Y	1	

Servo system

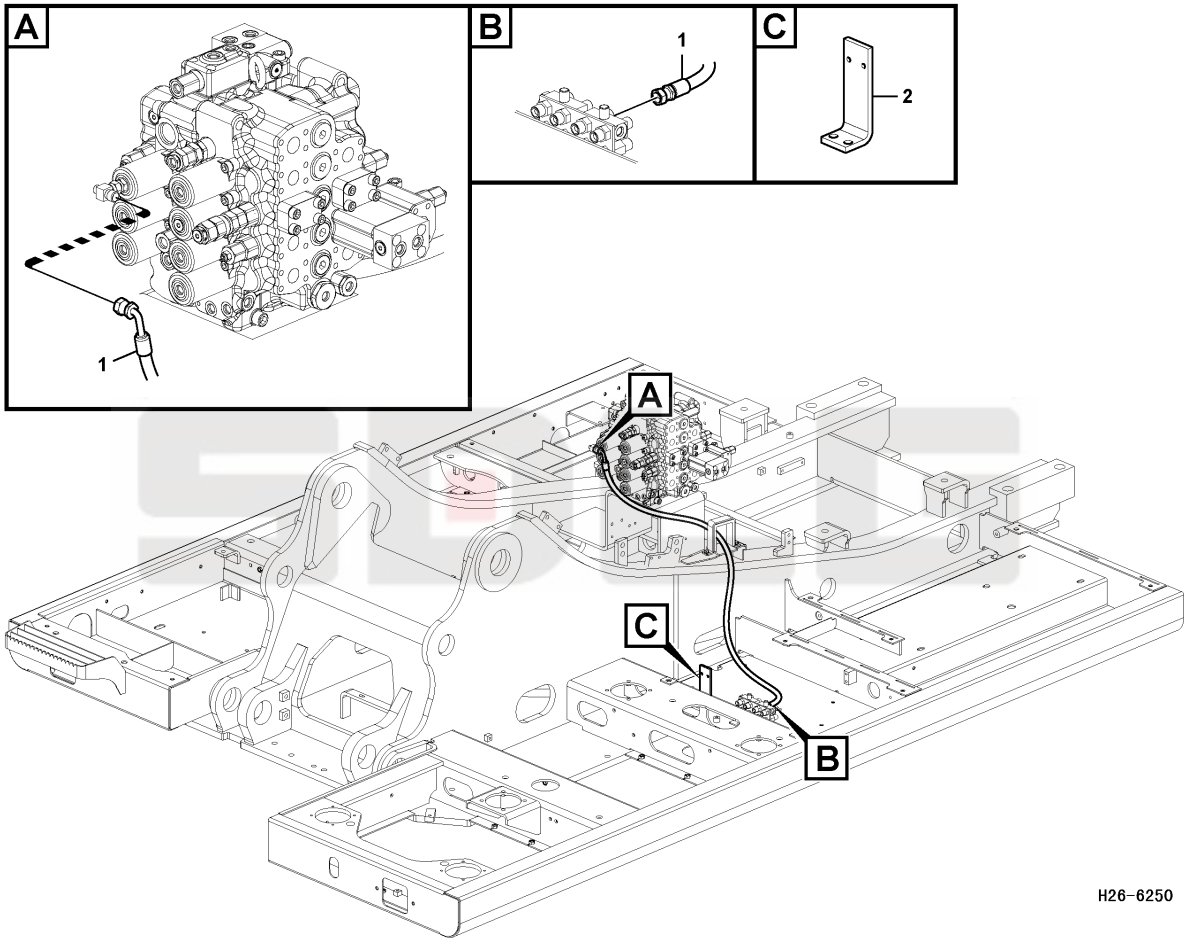

Key	Part No.	Description	Spare parts Y/N	Qty	Remarks
1	11217092	Hose assembly	Y	1	
2	kongbai	Kongbai	N	1	

Working hydraulic system

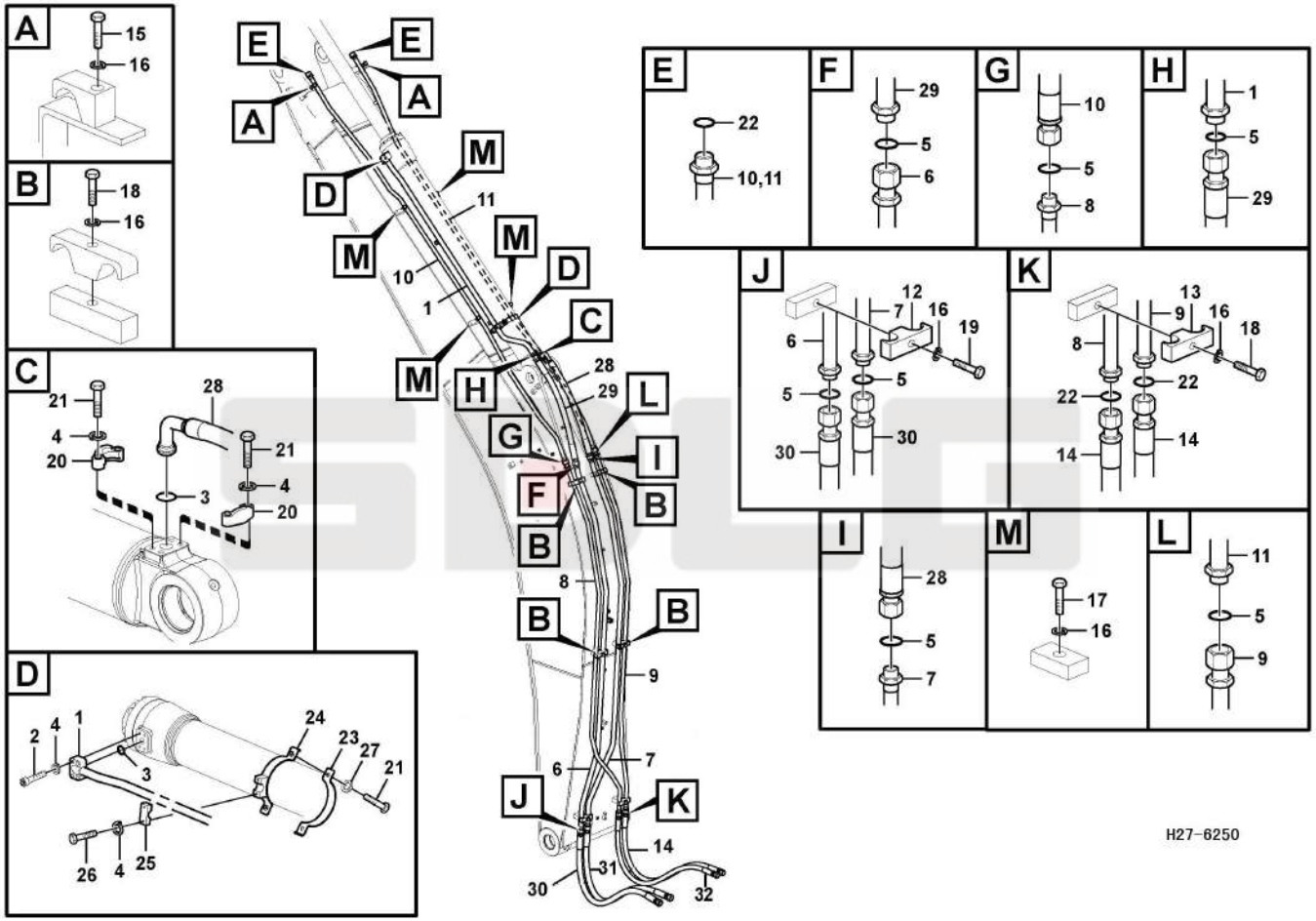

Key	Part No.	Description	Spare parts Y/N	Qty	Remarks
1	11212045	Hose	Y	1	
2	11212046	Hex. socket screw	Y	4	
3	11221049	O-ring	N	2	
4	11210064	Spring washer	Y	10	
5	11210114	O-ring	Y	7	
6	11212047	Pipe	Y	1	
7	11212048	Pipe	Y	1	
8	11212049	Pipe	Y	1	
9	11212050	Pipe	Y	1	
10	11212051	Pipe	Y	1	
11	11212052	Pipe	Y	1	
12	11212056	Clamp	Y	1	
13	11211130	Clamp	Y	1	
14	11217096	Hose assembly	Y	2	
15	11210105	Hexagon screw	Y	2	
16	11210067	Spring washer	Y	12	
17	11210193	Hexagon screw	Y	4	
18	11210217	Hexagon screw	Y	5	
19	11210208	Hexagon screw	Y	1	
20	11210018	Flange	Y	2	
21	11210124	Hexagon screw	Y	6	
22	11212396	O-ring	Y	4	
23	11214423	Plate	Y	1	
24	11214424	Plate	Y	1	
25	11212055	Clamp	Y	1	
26	11212058	Hexagon screw	Y	2	
27	11210197	Plain washer	Y	2	
28	11217099	Hose assembly	Y	1	
29	11217277	Hose	Y	1	
30	11217097	Hose assembly	Y	1	

Working hydraulic system

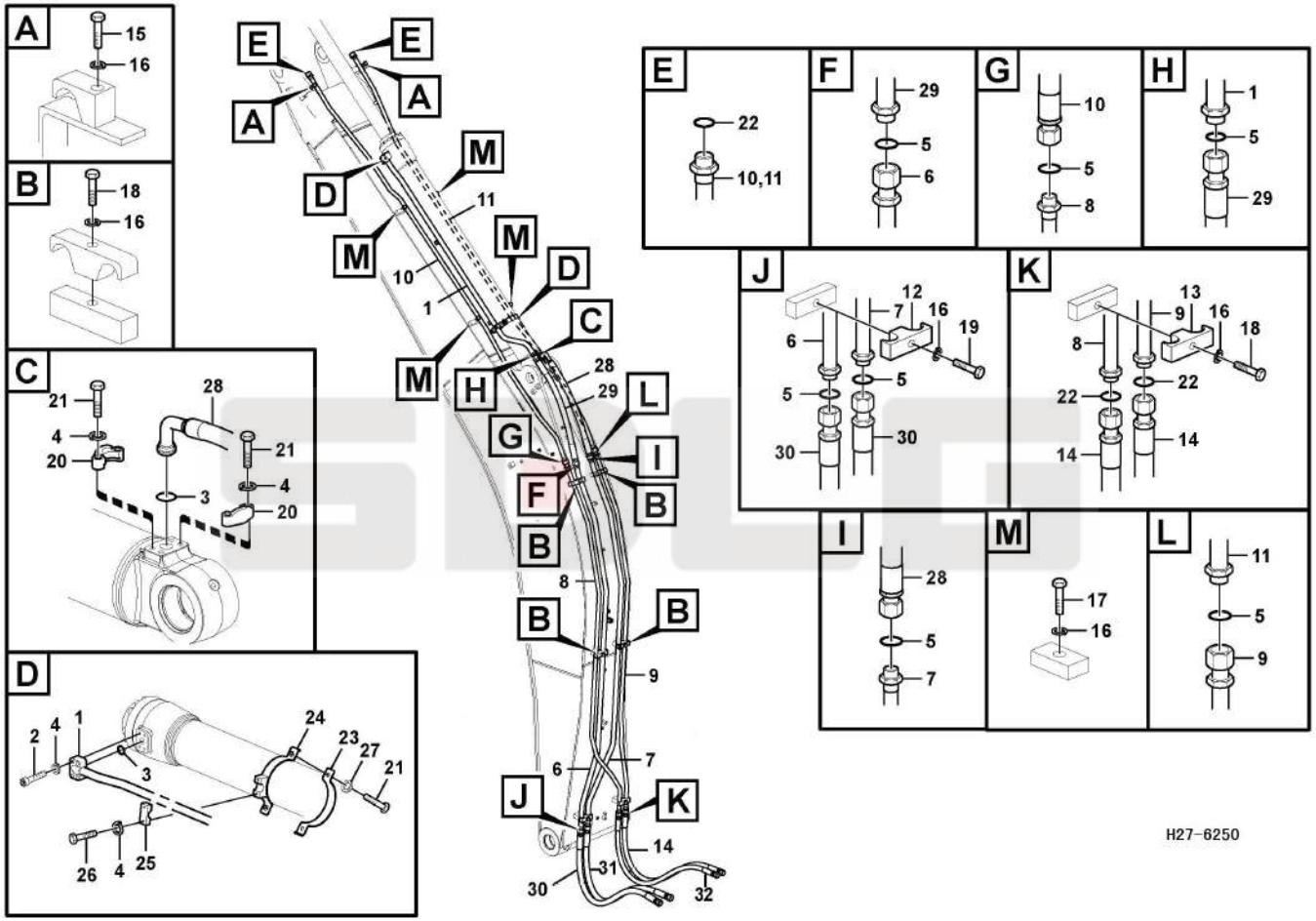

Key	Part No.	Description	Spare parts Y/N	Qty	Remarks
31	11217254	Hose	Y	1	
32	11217256	Hose	Y	1	

Working hydraulic system

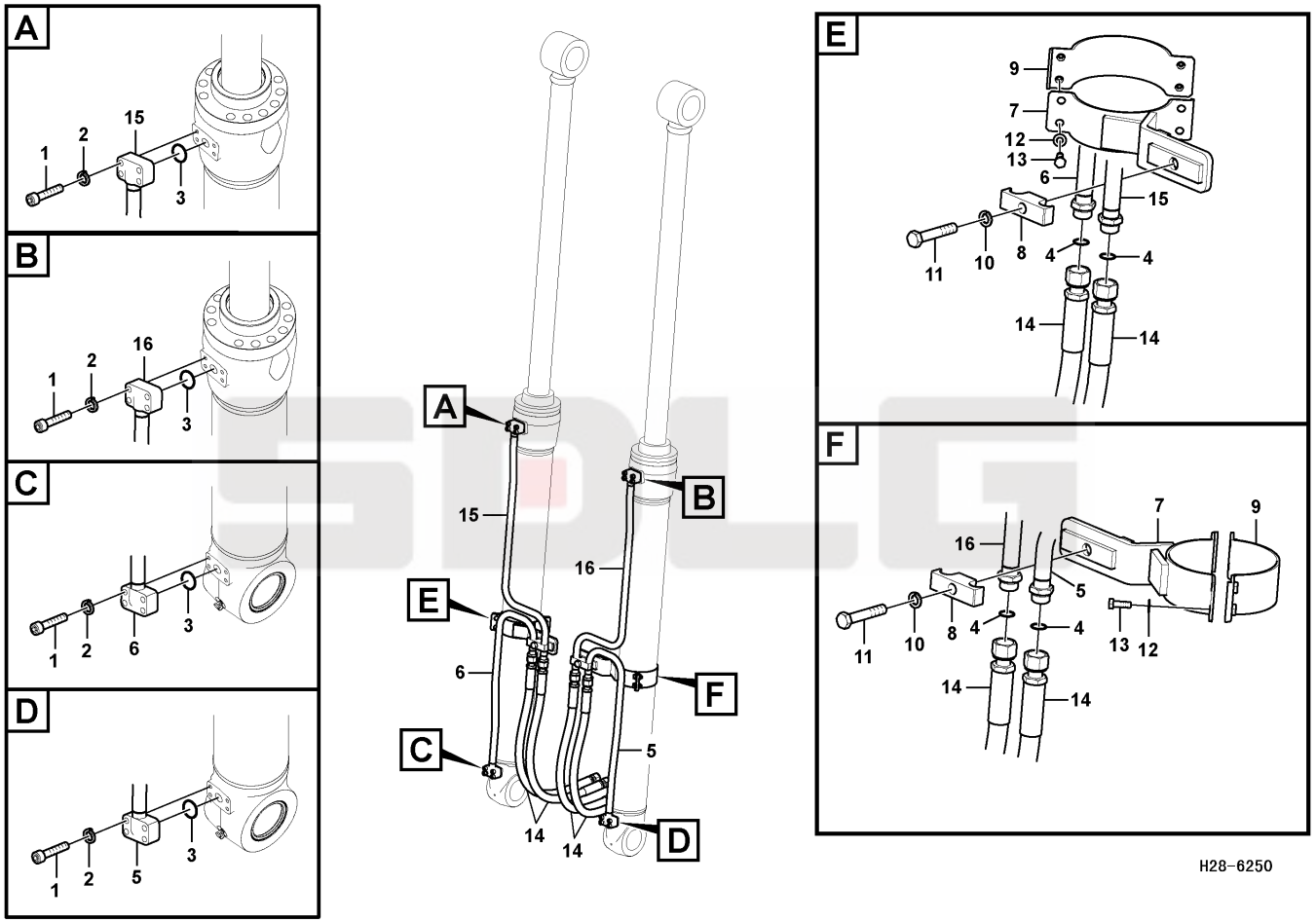

Key	Part No.	Description	Spare parts Y/N	Qty	Remarks
1	11210152	Hex. socket screw	Y	16	
2	11210064	Spring washer	Y	16	
3	11210047	O-ring	Y	4	
4	11212396	O-ring	Y	4	
5	11212062	Pipe	Y	1	
6	11212063	Pipe	Y	1	
7	11214437	Clamp	N	2	
8	11211130	Clamp	Y	2	
9	11214436	Clamp	N	2	
10	11210067	Spring washer	Y	2	
11	11211930	Hexagon screw	Y	2	
12	11210197	Plain washer	Y	8	
13	11210124	Hexagon screw	Y	8	
14	11217273	Hose	Y	4	
15	11212060	Pipe	Y	1	
16	11212061	Pipe	Y	1	

Working hydraulic system

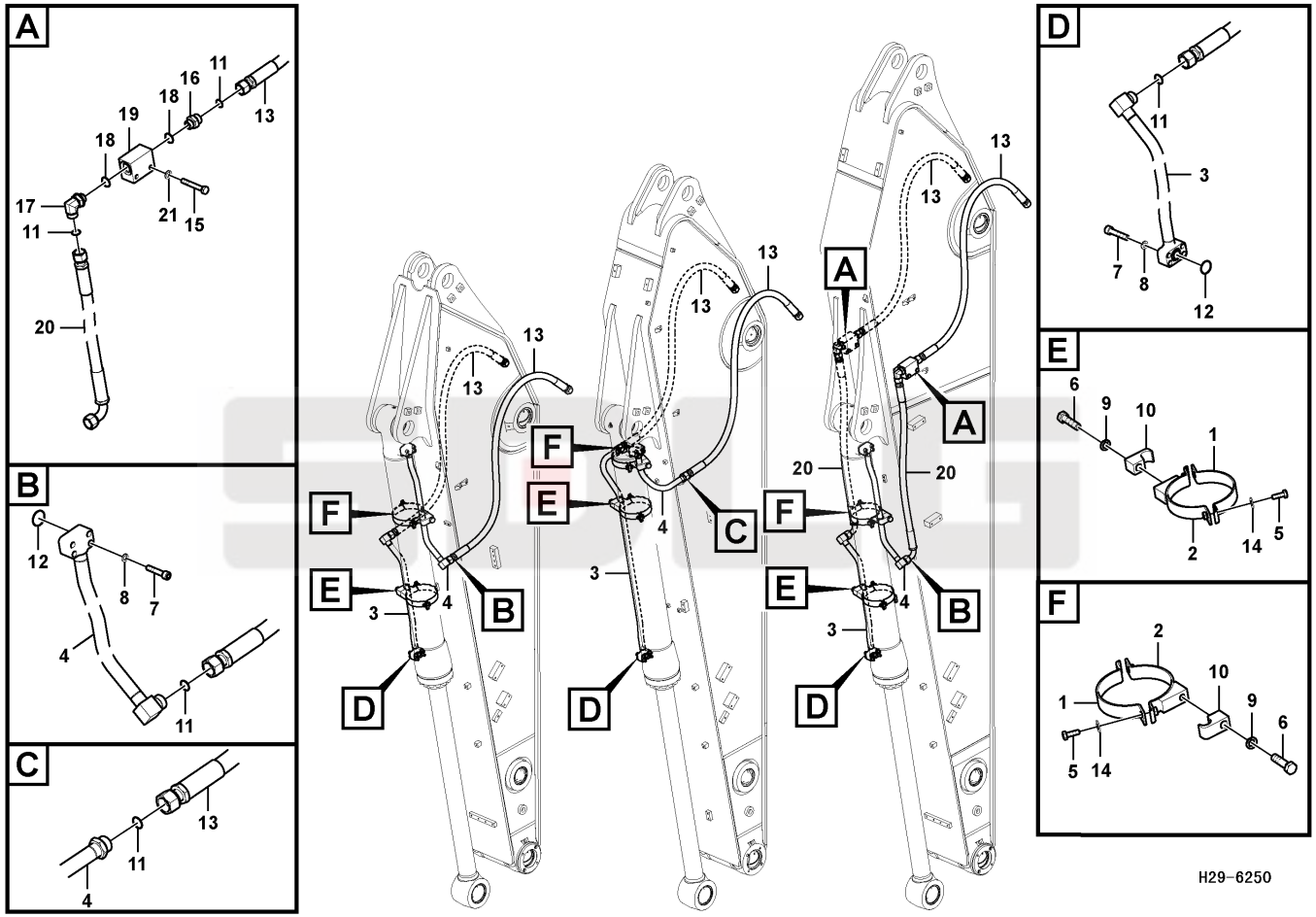

Key	Part No.	Description	Spare parts Y/N	Qty	Remarks
1	11214432	Clamp	N	2	
2	11214438	Clamp	N	2	
3	11212067	Pipe	Y	1	
4	11212068	Pipe	Y	1	
5	11210124	Hexagon screw	Y	4	
6	11210223	Hexagon screw	N	2	
7	11210152	Hex. socket screw	Y	8	
8	11210064	Spring washer	Y	8	
9	kongbai	Kongbai	N	2	
10	11211129	Clamp	Y	2	
11	11212396	O-ring	Y	2	
12	11210047	O-ring	Y	2	
13	11217098	Hose assembly	Y	2	
14	11210197	Plain washer	Y	4	

Bucket assembly

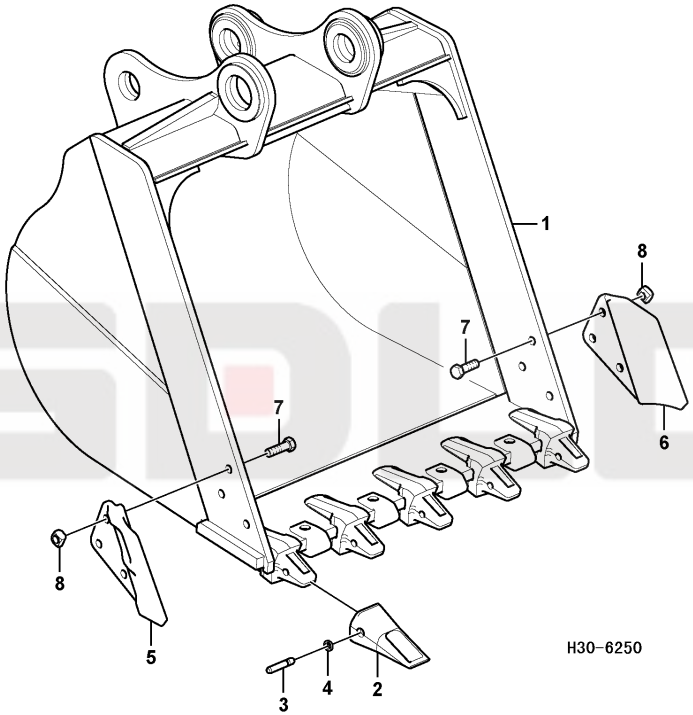

Key	Part No.	Description	Spare parts Y/N	Qty	Remarks
1	11217131	Bucket	N	1	
2	11210652	Tooth	N	5	
3	11210768	Pin	Y	5	
4	11210753	Washer	Y	5	
5	11217426	Bucket tooth	N	1	
6	11217425	Bucket tooth	N	1	
7	11219890	Screw	Y	6	
8	11211626	Nut	N	6	

Bucket link

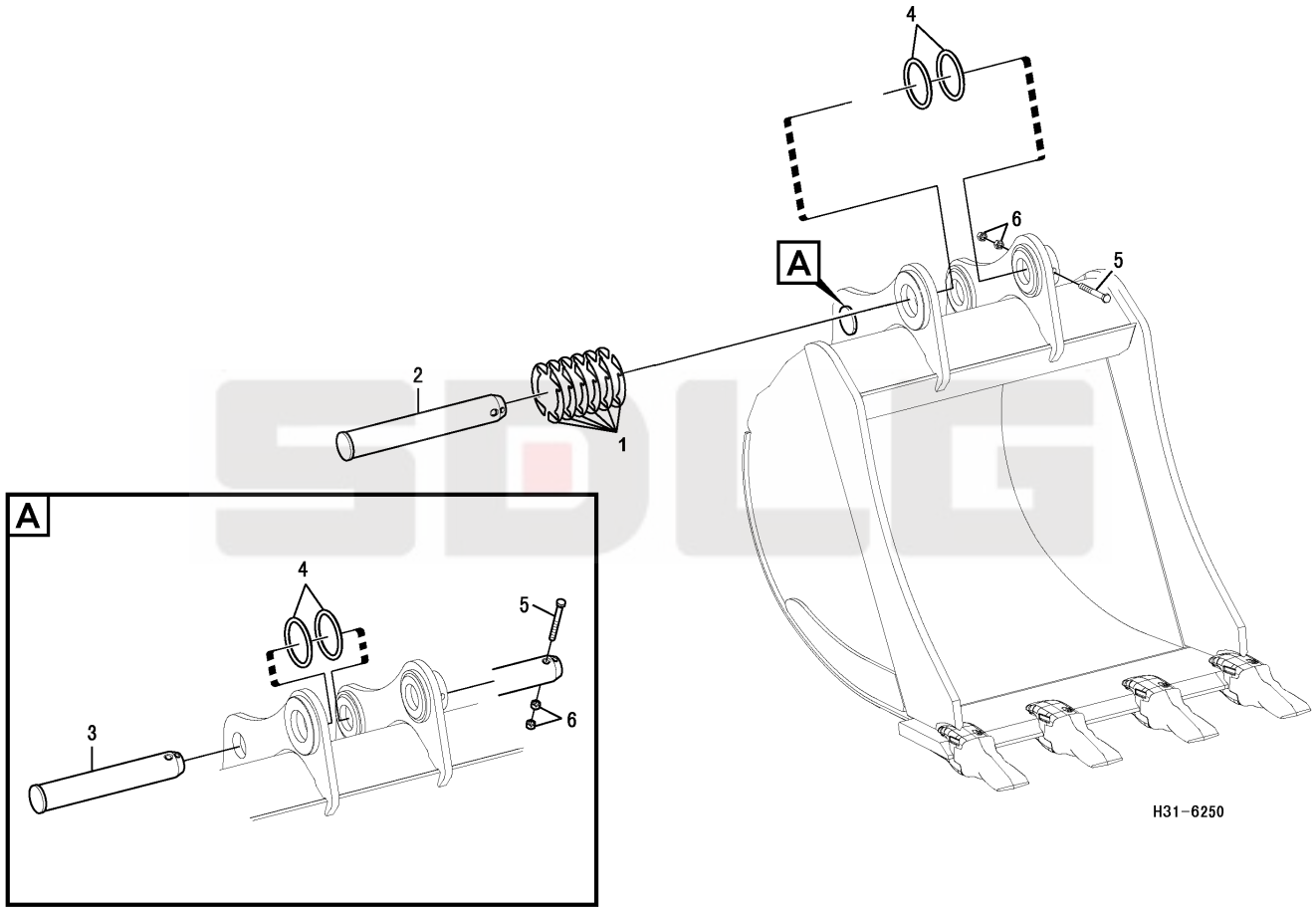

Key	Part No.	Description	Spare parts Y/N	Qty	Remarks
1	4043000648	Shim	Y	4	
2	11217022	Pin	N	1	
3	11217021	Pin	N	1	
4	11212075	Ring	Y	4	
5	11210206	Hexagon screw	Y	2	
6	11210109	Hexagon nut	Y	4	

Boom attachment

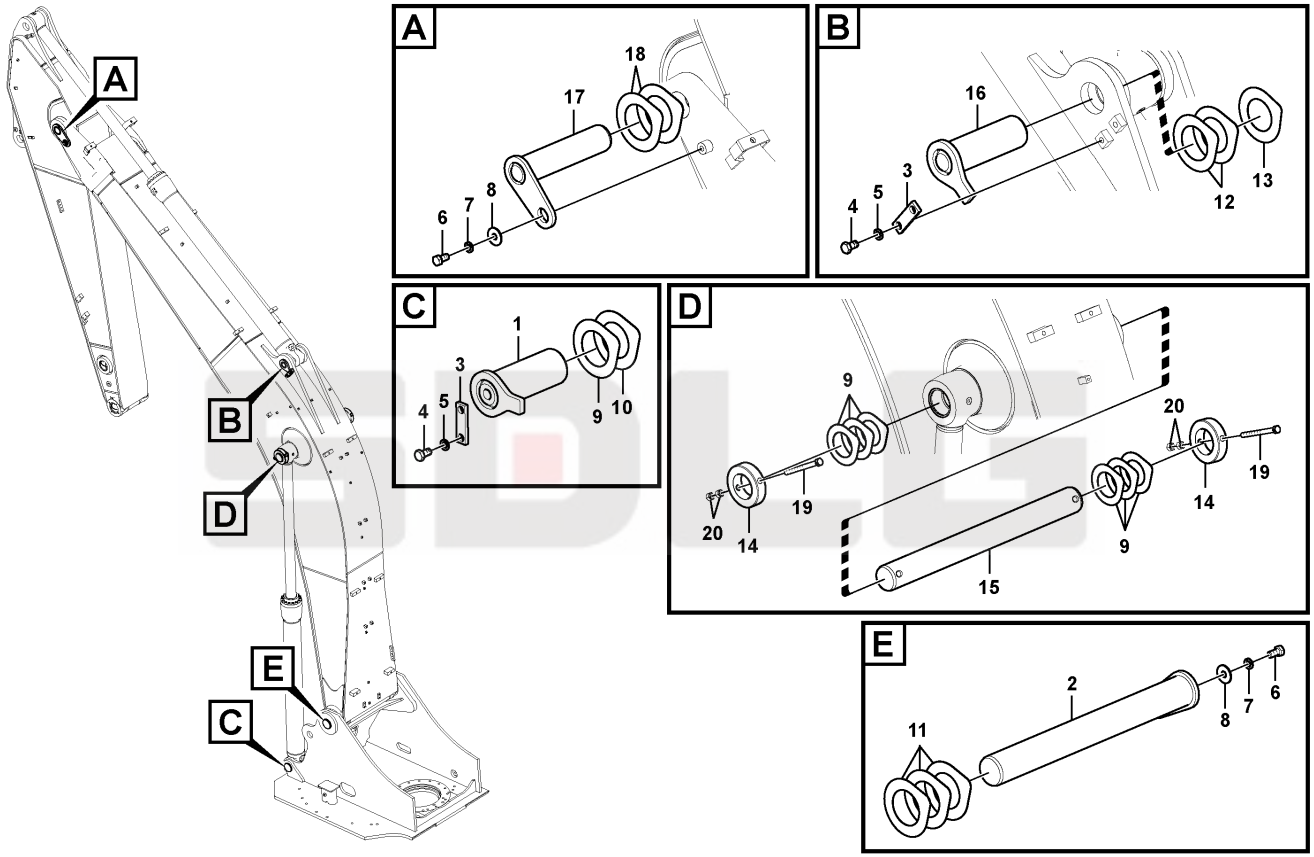

Key	Part No.	Description	Spare parts Y/N	Qty	Remarks
1	11212080	Pin	N	2	
2	11212083	Pin	N	1	
3	11210779	Lock	Y	3	
4	11210192	Hexagon screw	Y	6	
5	11210067	Spring washer	Y	6	
6	11210194	Hexagon screw	Y	2	
7	11211638	Spring washer	Y	2	
8	11210806	Washer	Y	2	
9	11212077	Shim	Y	8	
10	11212076	Shim	Y	2	
11	11212078	Shim	N	3	
12	11210790	Shim	Y	2	
13	11210791	Shim	Y	1	
14	11214439	Lock	N	2	
15	11212081	Pin	N	1	
16	14401529	Pin	Y	1	
17	11212082	Pin	N	1	
18	11212079	Shim	N	2	
19	11210206	Hexagon screw	Y	2	
20	11210109	Hexagon nut	Y	4	

Boom

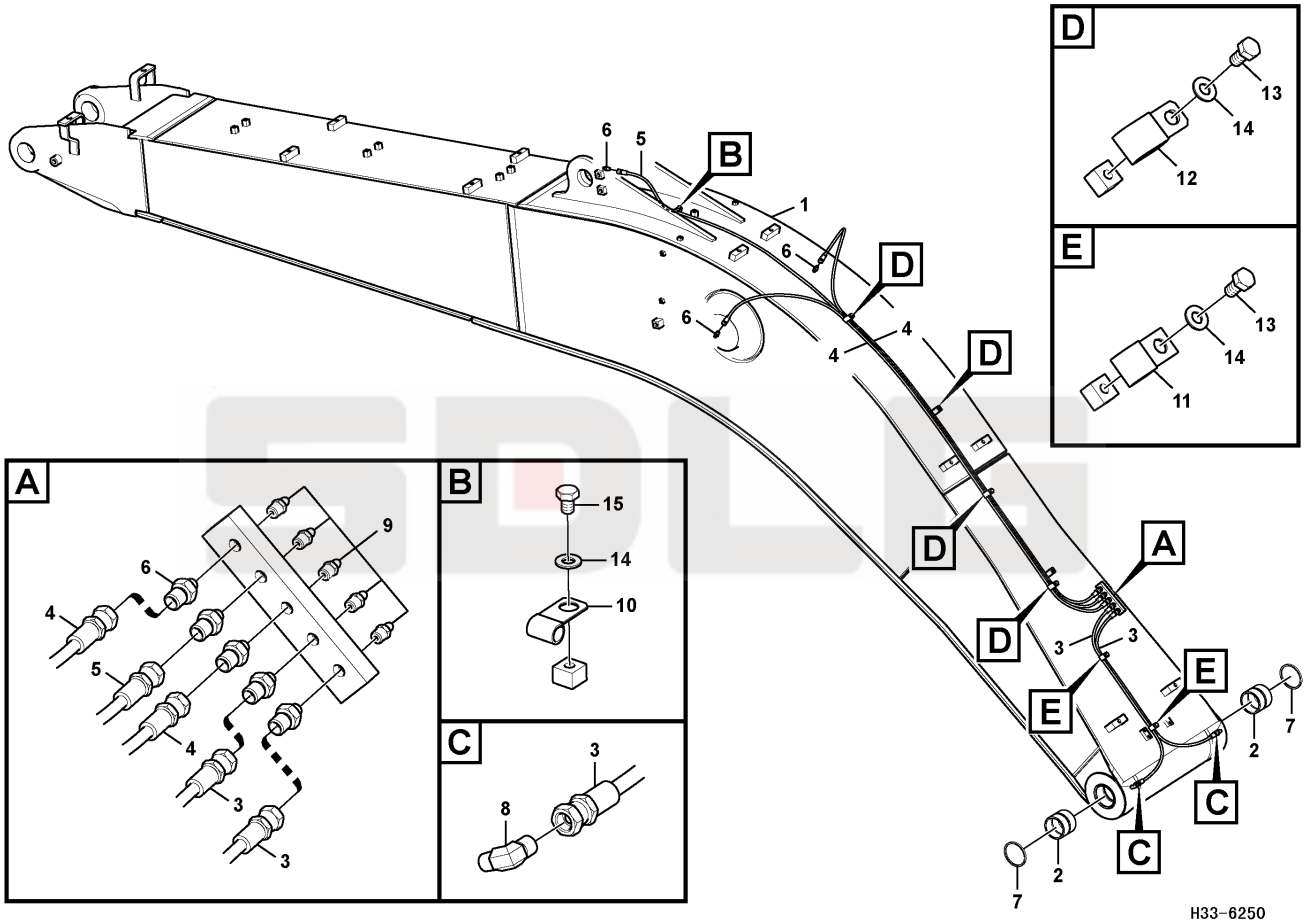

Key	Part No.	Description	Spare parts Y/N	Qty	Remarks
1	11216743	Excavator boom	N	1	
2	11216742	Bushing	Y	2	
3	11217445	Hose	N	2	
4	11217448	Hose	N	2	
5	11217453	Hose	N	1	
6	11210802	Nipple	Y	8	
7	11212087	Sealing ring	Y	2	
8	11210803	Nipple	Y	2	
9	11210001	Lubricating nipple	N	5	
10	11211654	Insulating clip	Y	1	
11	11211656	Insulating clip	Y	2	
12	11211663	Clip	Y	4	
13	11210117	Hexagon screw	Y	6	
14	11210218	Washer	Y	7	
15	11210187	Hexagon screw	Y	1	

Lifting cylinder assembly

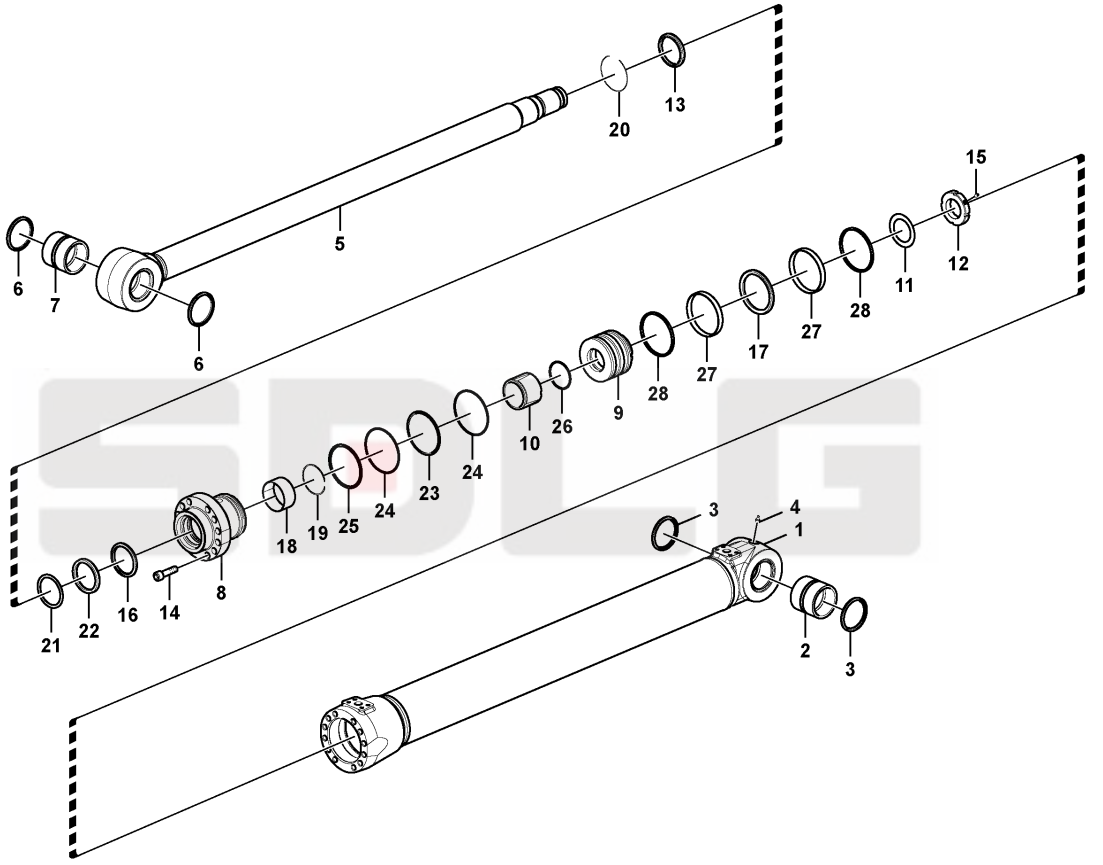

Key	Part No.	Description	Spare parts Y/N	Qty	Remarks
1	kongbai	Kongbai	N	1	
2	11219398	Bushing	Y	1	
3	11210871	Sealing	Y	2	
4	11210001	Lubricating nipple	N	1	
5	11218986	Piston rod	Y	1	
6	11210871	Sealing	Y	2	
7	11219399	Bushing	Y	1	
8	kongbai	Kongbai	N	1	
9	kongbai	Kongbai	N	1	
10	11219402	Rubber damper	Y	1	
11	11210659	Washer	Y	1	
12	11212243	Lock nut	Y	1	
13	11212246	Sealing	Y	1	
14	11214764	Screw	Y	15	
15	11210743	Screw	Y	1	
16	11212248	Sealing	Y	1	
17	11210407	Sealing	Y	1	
18	11212247	Bushing	Y	1	
19	11212250	Ring	Y	1	
20	11212244	Retaining ring	Y	1	
21	11212245	Retaining ring	Y	1	
22	11212249	Sealing	Y	1	
23	11211796	Ring	Y	1	
24	11210182	O-ring	Y	2	
25	11211792	Ring	Y	1	
26	11212257	O-ring	Y	1	
27	11211784	Wear ring	Y	2	
28	11211801	Sealing ring	Y	2	
29	11212847	Sealing kit	Y	1	
30	11219001	Boom cylinder	Y	2	

Attaching arm

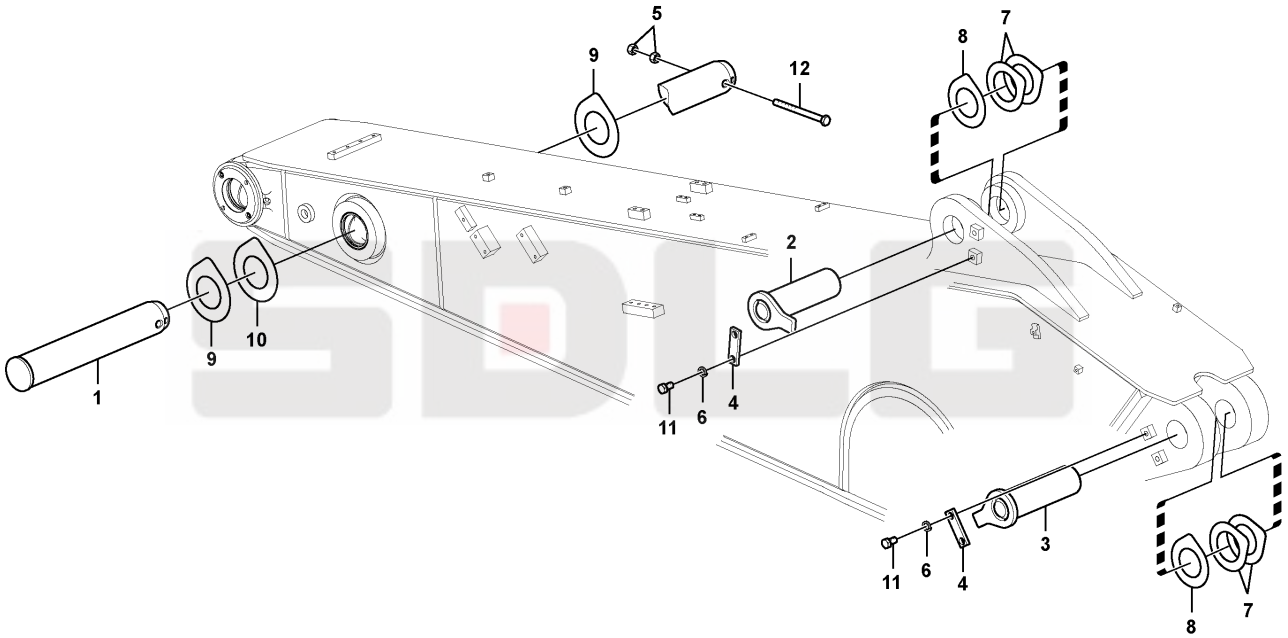

H35-6250

Key	Part No.	Description	Spare parts Y/N	Qty	Remarks
1	11216983	Pin	N	1	
2	14401529	Pin	Y	1	
3	11216979	Pin	N	1	
4	11210779	Lock	Y	2	
5	11210109	Hexagon nut	Y	2	
6	11210067	Spring washer	Y	4	
7	11210790	Shim	Y	4	
8	11210791	Shim	Y	2	
9	11210780	Shim	Y	2	
10	11210781	Shim	Y	1	
11	11210192	Hexagon screw	Y	4	
12	11210107	Screw	Y	1	

Dipper arm

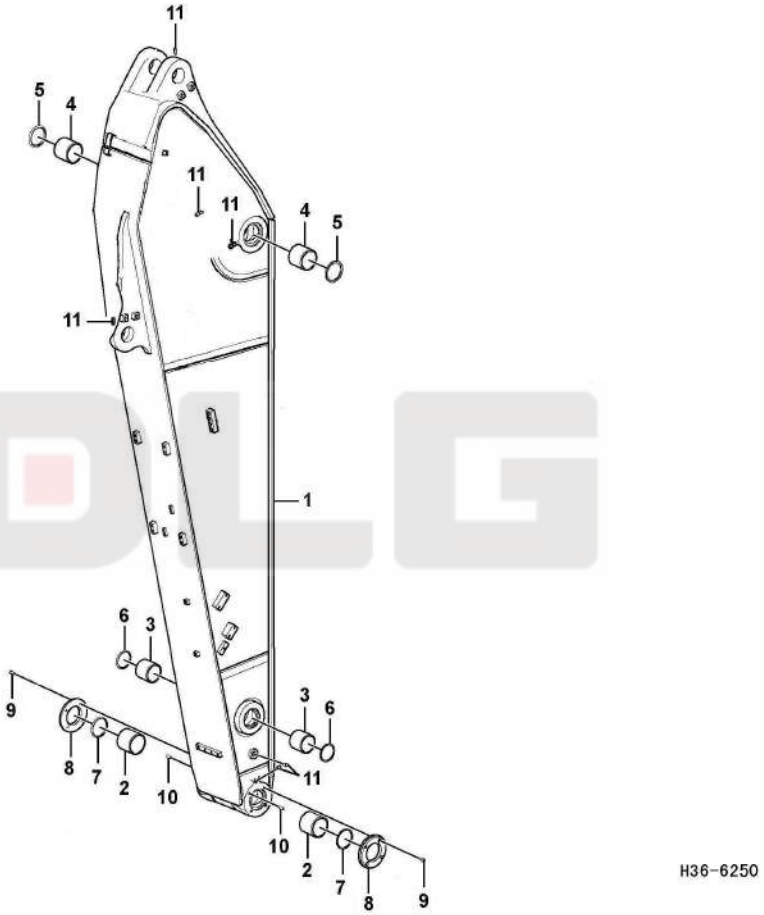

Key	Part No.	Description	Spare parts Y/N	Qty	Remarks
1	14401851	Digging arm	Y	1	
2	11212094	Bushing	Y	2	
3	11212093	Bushing	Y	2	
4	11210789	Bushing	Y	2	
5	11210872	Sealing	Y	2	
6	11210870	Sealing	Y	2	
7	11210871	Sealing	Y	2	
8	14401361	Cover	Y	2	
9	11210150	Hex. socket screw	Y	4	
10	11210786	Pin	Y	4	
11	11210001	Lubricating nipple	N	7	

Dipper arm cylinder

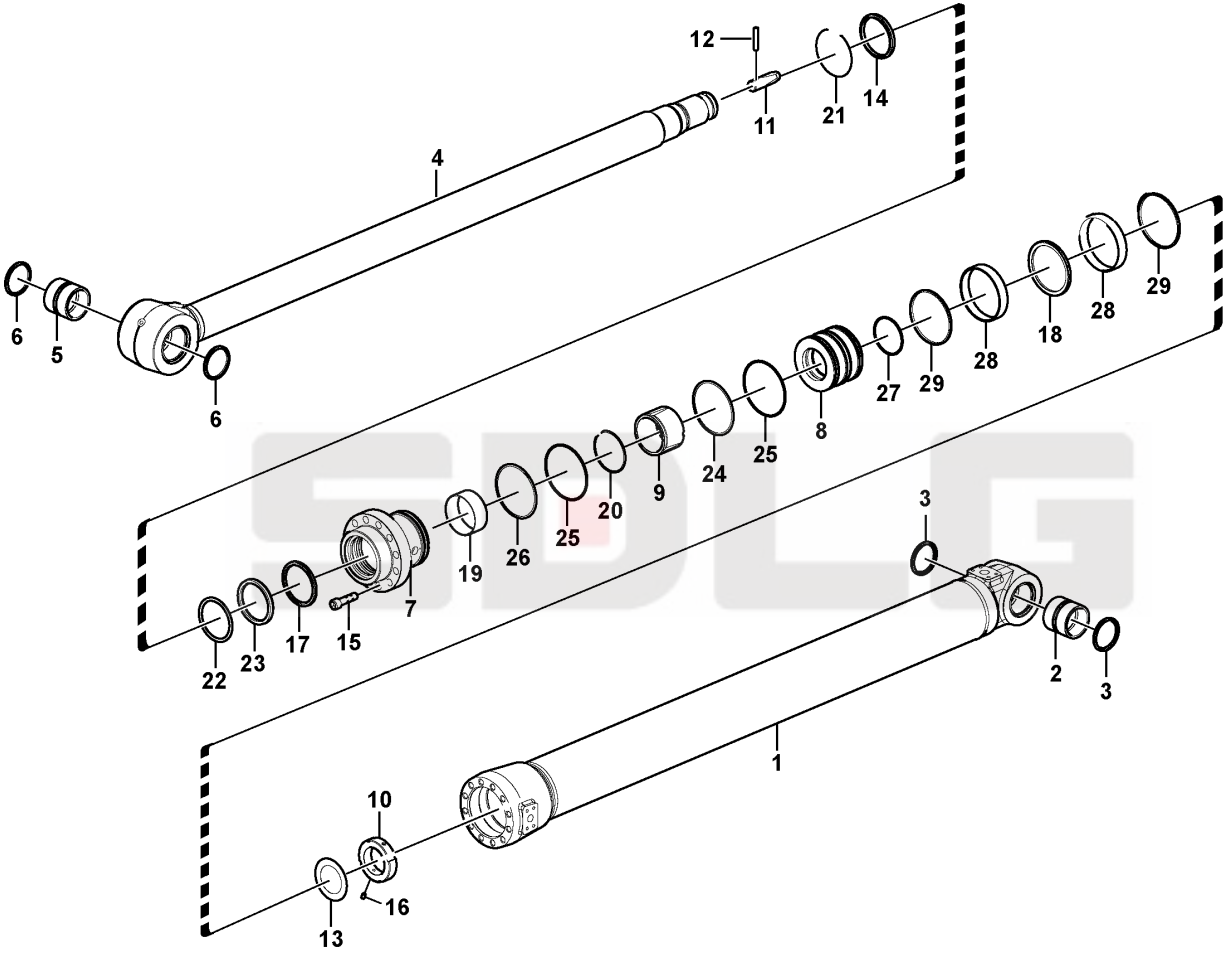

H37-6250

Key	Part No.	Description	Spare parts Y/N	Qty	Remarks
1	kongbai	Kongbai	N	1	
2	11210504	Bushing	Y	1	
3	11210870	Sealing	Y	2	
4	11212259	Rod	Y	1	
5	11210504	Bushing	Y	1	
6	11210870	Sealing	Y	2	
7	kongbai	Kongbai	N	1	
8	kongbai	Kongbai	N	1	
9	11212258	Rubber sleeve	Y	1	
10	11210724	Lock nut	Y	1	
11	11218716	Cushion	Y	1	
12	11219864	Pin	Y	1	
13	11210659	Washer	Y	1	
14	11212260	Sealing ring	Y	1	
15	11214764	Screw	Y	15	
16	11210743	Screw	Y	1	
17	11212261	Sealing ring	Y	1	
18	11212262	Piston seal	Y	1	
19	11212264	Bushing	Y	1	
20	11212263	Ring retainer	Y	1	
21	11212265	Retaining ring	Y	1	
22	11212268	Ring	Y	1	
23	11212266	Sealing ring	Y	1	
24	11212267	Ring	Y	1	
25	11212273	O-ring	Y	2	
26	11212270	Ring	Y	1	
27	11212272	O-ring	Y	1	
28	11212269	Wear ring	Y	2	
29	11212271	Sealing ring	Y	2	
30	11212848	Sealing kit	Y	1	

Dipper arm cylinder

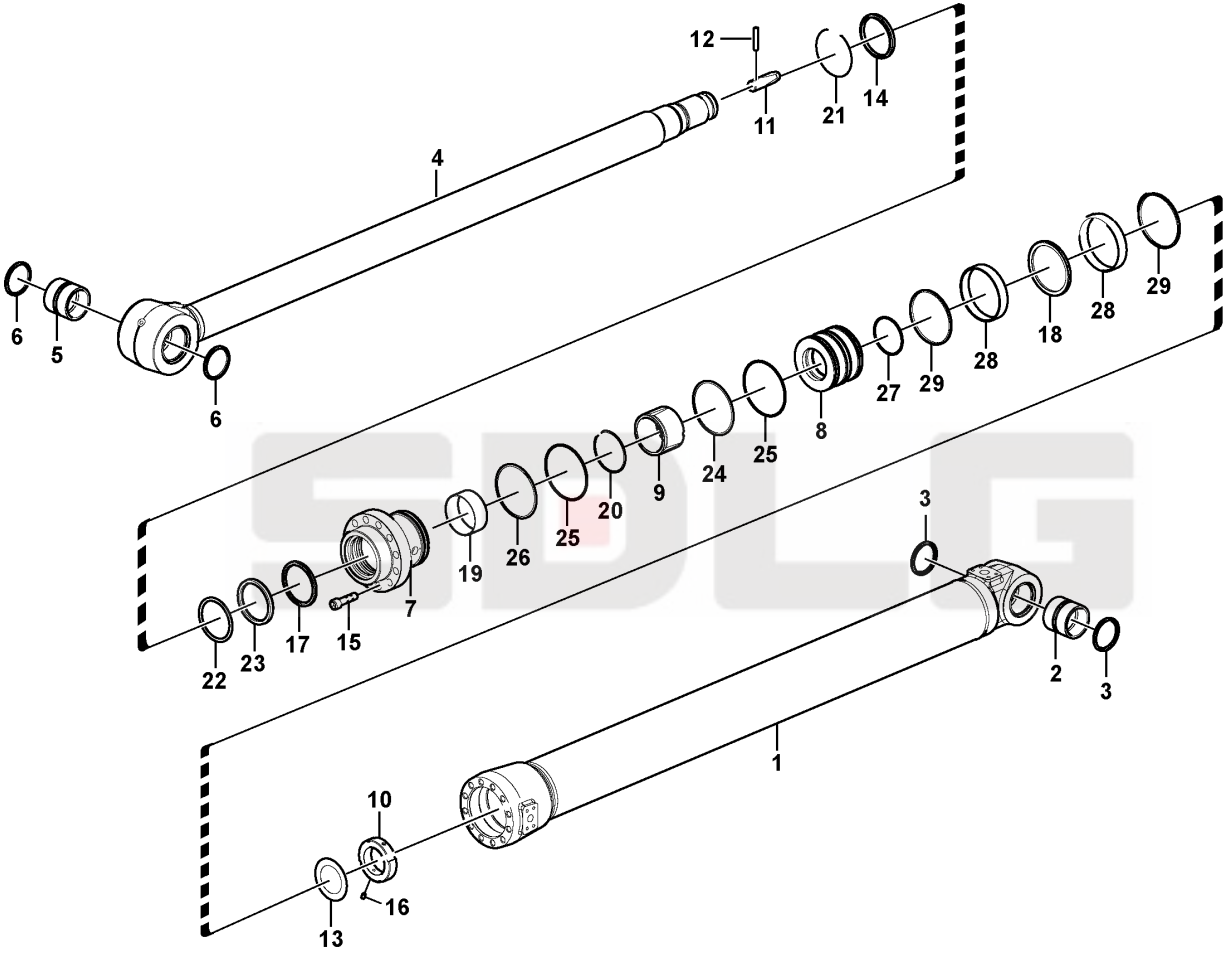

H37-6250

Key	Part No.	Description	Spare parts Y/N	Qty	Remarks
31	11217692	Hydraulic cylinder	Y	1	

Cylinder piston assembly

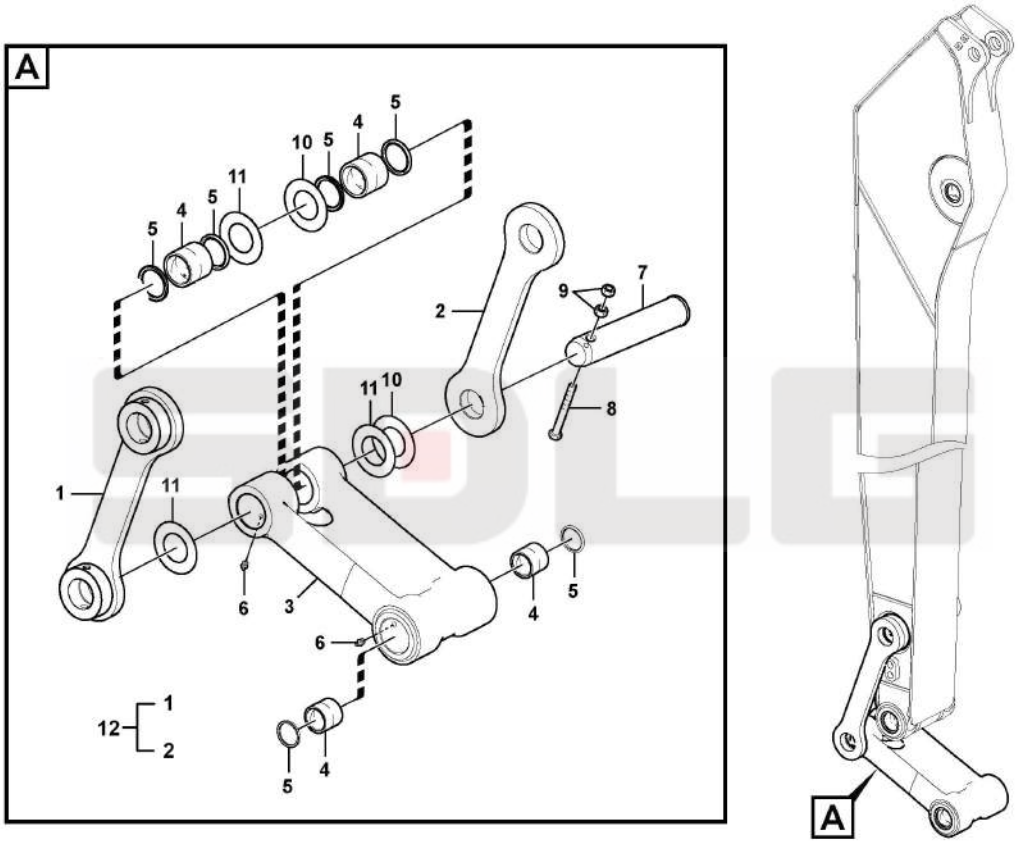

Key	Part No.	Description	Spare parts Y/N	Qty	Remarks
1	11212109	Yoke	N	1	
2	11212108	Yoke	N	1	
3	11212111	Connecting rod	N	1	
4	11212107	Bushing	Y	4	
5	11210871	Sealing	Y	6	
6	11210001	Lubricating nipple	N	4	
7	14401367	Pin	Y	1	
8	11210206	Hexagon screw	Y	1	
9	11210109	Hexagon nut	Y	2	
10	11212105	Shim	Y	2	
11	11212106	Shim	Y	3	
12	14401368	Yoke	Y	1	

Bucket cylinder

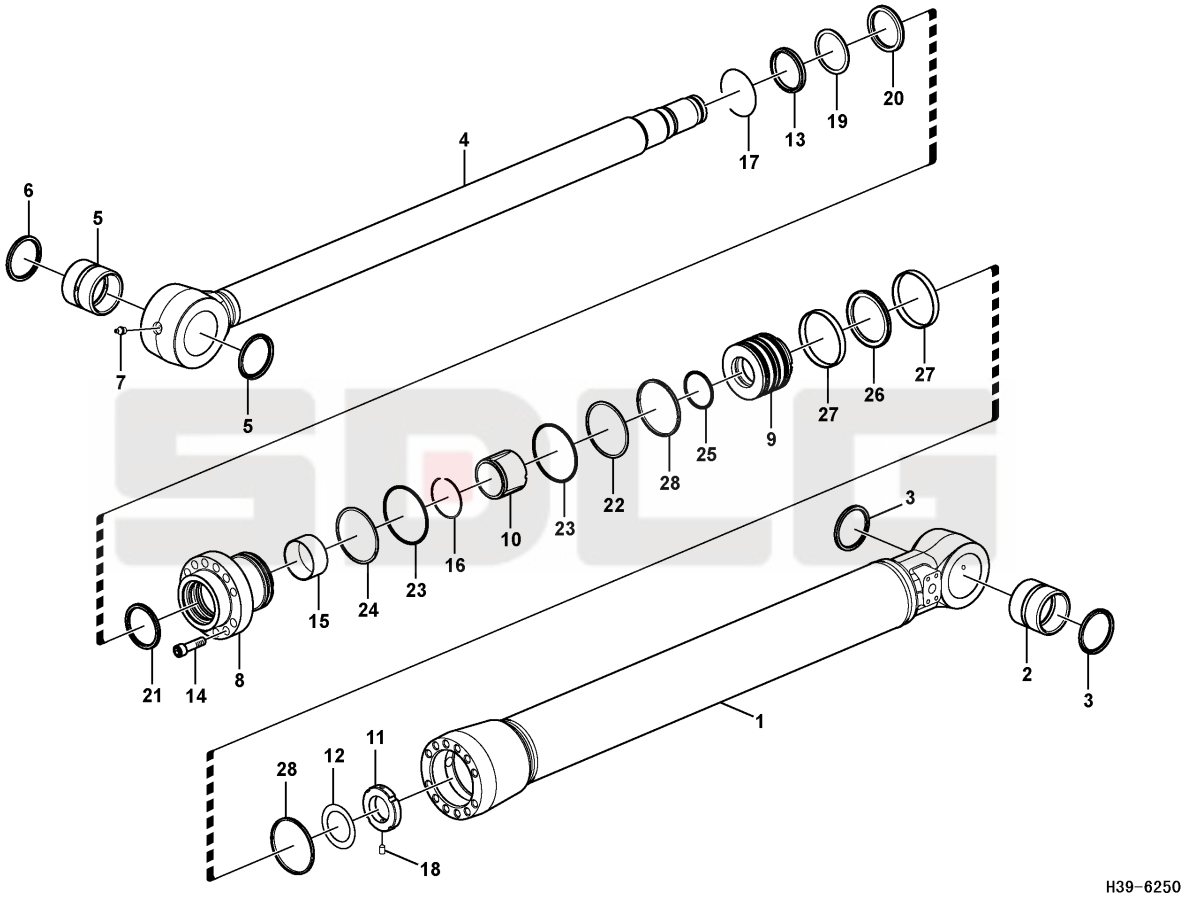

Key	Part No.	Description	Spare parts Y/N	Qty	Remarks
1	kongbai	Kongbai	N	1	
2	11212240	Bushing	Y	1	
3	11210870	Sealing	Y	2	
4	11212241	Rod	Y	1	
5	11212239	Bushing	Y	1	
6	11210871	Sealing	Y	2	
7	11210001	Lubricating nipple	N	1	
8	kongbai	Kongbai	N	1	
9	kongbai	Kongbai	N	1	
10	11212242	Rubber damper	N	1	
11	11212243	Lock nut	Y	1	
12	11210659	Washer	Y	1	
13	11212246	Sealing	Y	1	
14	11214764	Screw	Y	15	
15	11212247	Bushing	Y	1	
16	11212245	Retaining ring	Y	1	
17	11212244	Retaining ring	Y	1	
18	11210743	Screw	Y	1	
19	11212250	Ring	Y	1	
20	11212249	Sealing	Y	1	
21	11212248	Sealing	Y	1	
22	11212252	Ring	Y	1	
23	11212253	O-ring	Y	2	
24	11212251	Ring	Y	1	
25	11212257	O-ring	Y	1	
26	11212254	Sealing	Y	1	
27	11212255	Wear ring	Y	2	
28	11212256	Sealing ring	Y	2	
29	11212849	Sealing kit	Y	1	
30	11212137	Bucket cylinder	Y	1	

SDLG

M

COVER SYSTEM

SHANDONG LINGONG CONSTRUCTION MACHINERY CO.,LTD.

Sign and logo

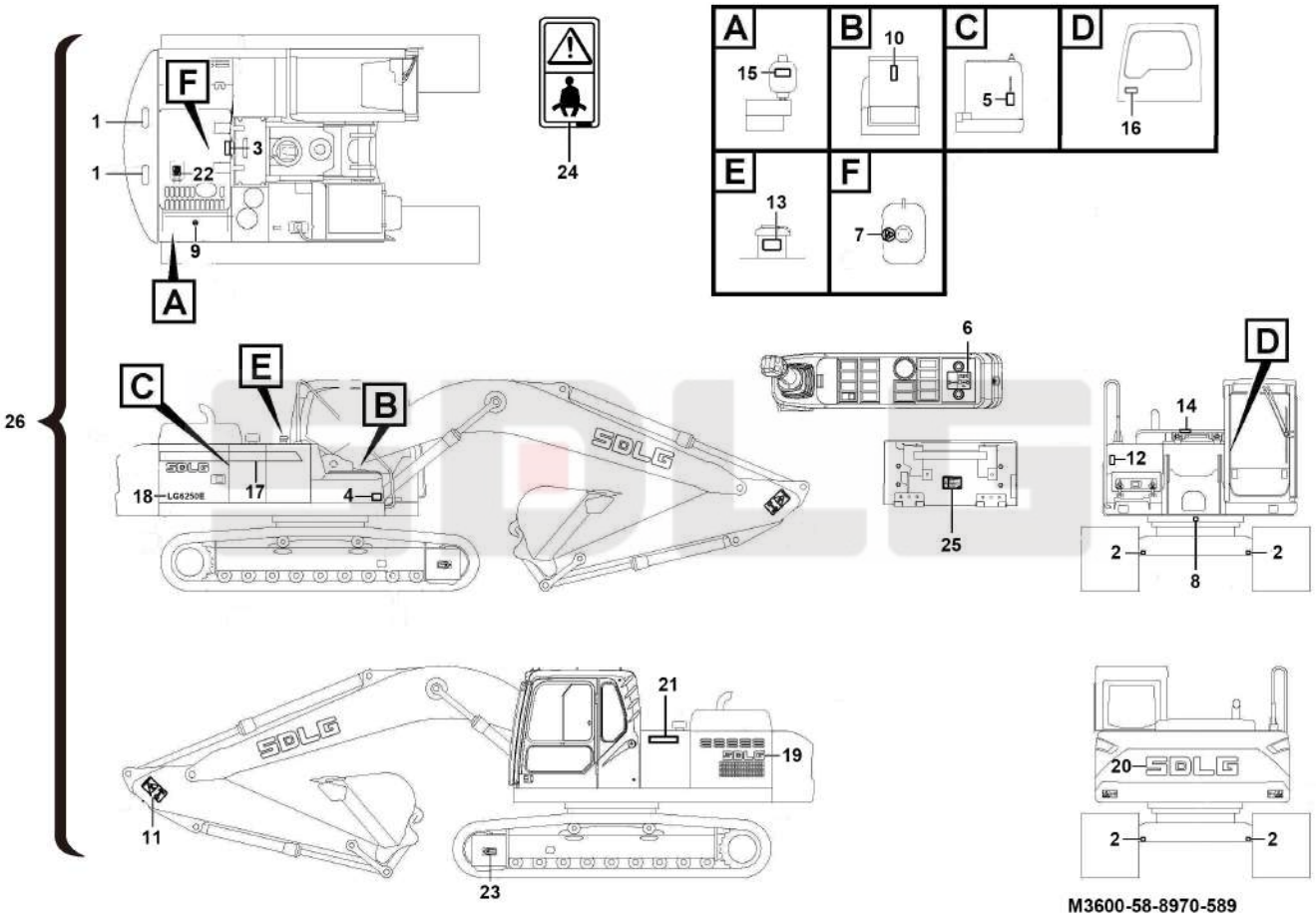

Key	Part No.	Description	Spare parts Y/N	Qty	Remarks
1	11210229	Decal	Y	4	
2	11210231	Decal	Y	4	
3	14400777	Decal	Y	1	
4	14401697	Decal	Y	1	
5	11210399	Decal	Y	1	
6	14401699	Decal	Y	1	
7	14400007	Decal	Y	1	
8	11210584	Decal	Y	1	
9	14406236	Decal	Y	1	
10	14400523	Decal	Y	1	
11	11212833	Decal	Y	2	
12	14406232	Decal	Y	1	
13	14401704	Decal	Y	1	
14	14400524	Decal	Y	1	
15	14406097	Decal	Y	1	
16	11212844	Decal	Y	1	
17	26360004481	Decal	Y	1	
18	26360004441	Decal	Y	2	
19	14400278	Decal	Y	2	
20	14400774	Decal	Y	1	
21	14400516	Decal	N	1	
22	14401687	Decal	Y	1	
23	14401693	Decal	Y	2	
24	14401695	Decal	N	1	
25	14401703	Decal	Y	1	
26	14402158	Decal set	Y	1	